SUNNYVALE FIRE STATION 5
160' MONOPOLE

1210 Bordeaux Drive
Sunnyvale, CA 94089

L. D. STROBEL CO. INC.
DESIGN / CONSTRUCTION
WIRELESS COMMUNICATIONS
1022 SHARY CIRCLE, SUITE 9, CONCORD, CA. 94518
PHONE: 925-686-3241 FAX: 925-686-3350

REGISTERED PROFESSIONAL ENGINEER
CONRAD L. ALFARO
NO C 28699
EXPIRE 3-31-17
CIVIL
STATE OF CALIFORNIA

REVISIONS

NO.	DATE	DESCRIPTION
1	6/8/15	PRELIMINARY
2	6/10/15	90% ZD
2	6/22/15	95% ZD

LOCATION MAP

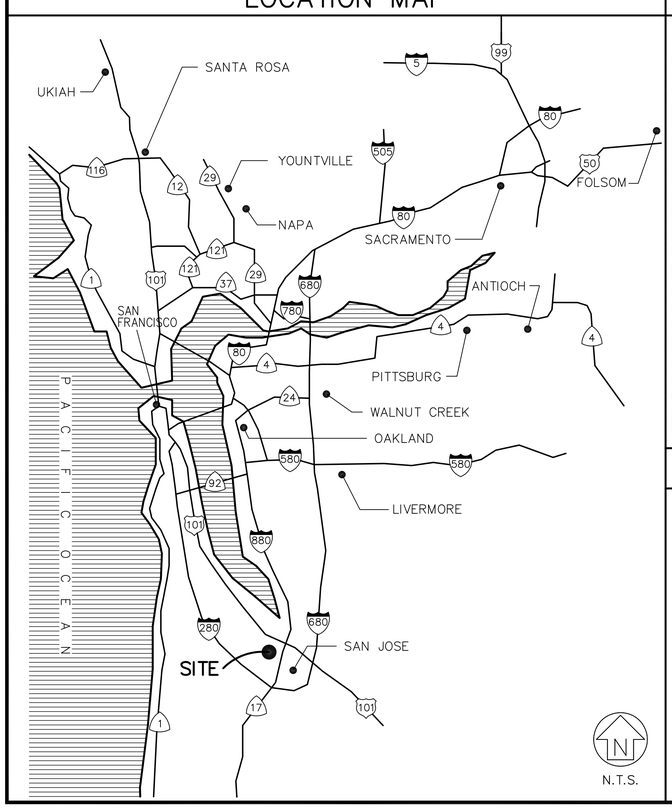

VICINITY MAP

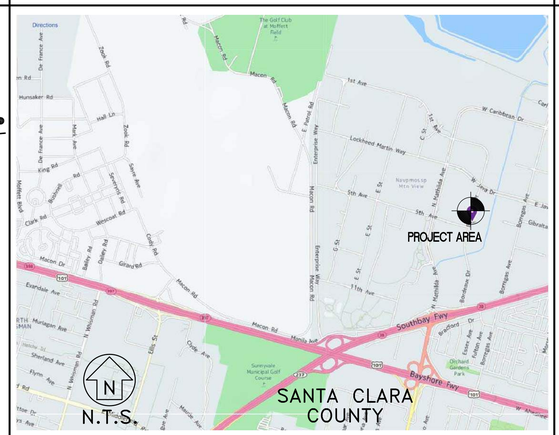

PROJECT SITE INFORMATION

1. LOT SIZE: 90,014.6 SF
2. FIRE STATION: 18,168 SF
3. BLDG HEIGHT: 23' AGL
4. MONOPOLE HEIGHT: 160' AGL
5. (E) STREET CURB ELEV: 8.60± AMSL

CODE COMPLIANCE

ALL WORK AND MATERIALS SHALL BE PERFORMED AND INSTALLED IN COMPLIANCE WITH THE CURRENT EDITIONS OF THE FOLLOWING CODES AS ADOPTED BY THE LOCAL GOVERNING AUTHORITIES. NOTHING IN THESE PLANS IS TO BE CONSTRUED TO PERMIT WORK NOT CONFORMING TO THESE CODES.

1. 2013 CALIFORNIA ADMINISTRATIVE CODE (CAC)
2. 2013 CALIFORNIA BUILDING CODE (CBC)
3. 2013 CALIFORNIA MECHANICAL CODE (CMC)
4. 2013 CALIFORNIA PLUMBING CODE (CPC)
5. 2013 CALIFORNIA ELECTRIC CODE (CEC)
6. 2013 CALIFORNIA FIRE CODE (CFC)
7. COUNTY ORDINANCES

ACCESSIBILITY REQUIREMENTS:
FACILITY IS UNMANNED AND NOT FOR HUMAN HABITATION. HANDICAPPED ACCESS REQUIREMENTS ARE NOT REQUIRED IN ACCORDANCE WITH THE 2013 CALIFORNIA BUILDING CODE, TITLE 24, PART 2, VOLUME 1, CHAPTER 11B, SECTION 11B-203.5 (EXCEPTIONS).

CALL BEFORE YOU DIG
Underground Service Alert of Central/Northern California
CALL: TOLL FREE 1-800-227-2600
TWO WORKING DAYS BEFORE YOU DIG

PROJECT DESCRIPTION

PROPOSED INSTALLATION OF A 160' TALL MONOPOLE, (3) OMNI ANTENNA, (1) TTA, (1) MICROWAVE ANTENNA AND CABLING FOR THE SUNNYVALE FIRE STATION 5 WITH CAPACITY FOR (3) FUTURE ANTENNA SECTOR ARRAYS AND (1) FUTURE MICROWAVE ANTENNA.

PROPOSED:
(3) OMNI ANTENNAS
(1) TTA
(1) MICROWAVE ANTENNA
(3) 1-5/8"CABLE
(1) ½"CABLE
(1) EW90 CABLE

FUTURE:
(33) 4' PANEL ANTENNAS
(24) RRUL REMOTE RADIO UNITS
(4) HYBRID TRUNKS
(42) 7/8"CABLES
(1) MICROWAVE ANTENNA
(1) EW90 CABLE

PROJECT DATA

JEFFREY HUNTER, CAPTAIN
BUREAU OF SPECIAL OPERATIONS
SUNNYVALE DEPARTMENT OF PUBLIC SAFETY 700 ALL AMERICA WAY | SUNNYVALE, CA 94086
408.730.7158
JHUNTER@SUNNYVALE.CA.GOV

CELL SITE DESIGNER:
L.D. STROBEL CO. INC.
1022 SHARY CIR. SUITE 9
CONCORD, CA 94518
CONTACT: JEFF GIESE
(925) 686-3241

STRUCTURAL ENGINEER:
C.L. ALFARO ASSOCIATES
338 SUMMERWOOD DRIVE
FREMONT, CA 94536
CONTACT: CONRAD ALFARO (510) 406-5138

SHEET INDEX

T-1 COVER SHEET: PROJECT TITLE, MAPS, AND INFORMATION
G-1 GENERAL NOTES, ABBREVIATIONS AND SYMBOLS
A-1 OVERALL SITE PLAN
A-2 ENLARGED SITE PLAN & MONOPOLE ELEVATION
A-3 ELEVATION NORTH & FUTURE ANTENNA PLANS
A-3.1 ELEVATION SOUTH
A-4 ELEVATION EAST
A-4.1 ELEVATION WEST
A-5 160' MONOPOLE CUT-SHEETS
A-5.1 160' MONOPOLE CUT-SHEETS
A-6 TRI-COLLAR BRACKET ASSEMBLY CUT-SHEETS
A-6.1 STANDOFF ARM CUT -SHEET
A-7 12' ULTRA BOOM CUT-SHEET
A-7.1 12' ULTRA BOOM CUT-SHEET
A-8 MONOPOLE DISH MOUNT ASSEMBLY ASSEMBLY CUT-SHEET
A-8.1 SIDELIGHT INSTALLATION DETAIL CUT-SHEET
A-8.2 T-ARM WORK PLATFORM CUT-SHEET
A-9 ANTENNA CUT-SHEETS
A-9.1 TOWER TOP AMPLIFIER CUT-SHEET
A-9.2 TOWER TOP AMPLIFIER CUT-SHEETS
A-10 MW DISH CUT-SHEET
A-10.1 MW DISH CUT-SHEETS
A-11 RRUS+A2, RRUS12 AND ANTENNA CUT-SHEETS
A-12 RAYCAP CUT-SHEET
A-13 RAYCAP CUT-SHEET

SUNNYVALE FIRE STATION 5
160' MONOPOLE
1210 BORDEAUX DRIVE
SUNNYVALE, CA 94089

DRAWN: MRB DATE: 6/30/15
FILE: 6638-T1
SHEET NO.
T-1

MADE IN U.S.A.

SYMBOLS AND MATERIALS

G–1 — DRAWING NUMBER; DISCIPLINE PREFIX

A / 1 — COLUMN LINE
LETTERS IN ONE DIRECTION
NUMBERS IN THE OTHER DIRECTION

2 — REVISION CLOUD AROUND REVISION OPTIONAL

A / A–1 — DETAIL
DETAIL IDENTIFICATION
SHEET WHERE DETAIL IS SHOWN
"–" INDICATES THAT DETAIL IS ON SAME SHEET

A / A–1 — SECTION CALLOUT
SECTION IDENTIFICATION
SHEET WHERE SECTION IS SHOWN
"–" INDICATES THAT SECTION IS ON SAME SHEET

SECTION OR DETAIL LABEL
SECTION OR DETAIL IDENTIFICATION

SECTION A / A–1
SCALE: 1/4"=1'–0"

SHEET WHERE SECTION OR DETAIL IS CALLED OUT
"–" INDICATES THAT SECTION OR IS CALLED OUT ON SAME SHEET

CONCRETE
CAST IN PLACE OR PRECAST

INSULATION, BATT

WOOD, FRAMING
THROUGH MEMBER

WOOD, FRAMING
INTERRUPTED MEMBER

ASPHALT PAVING
(SECTION)

ABBREVIATIONS

&	AND
@	AT
℄	CENTERLINE
PL	PLATE
AB	ANCHOR BOLT
AC	AIR CONDITIONING
ACOUS	ACOUSTICAL
ADJ	ADJUSTABLE
AFF	ABOVE FINISHED FLOOR
AGL	ABOVE GRADE LEVEL
ALT	ALTERNATE
ALUM	ALUMINUM
ANOD	ANODIZED
ATS	ATOMATIC TRANSFER SWITCH
BD	BOARD
BGL	BELOW GRADE LEVEL
BLDG	BUILDING
BLK	BLOCK
BLKG	BLOCKING
BM	BEAM
CAB	CABINET
CAT	CATALOG
CLG	CEILING
CLKG	CAULKING
CLO	CLOSET
CLR	CLEAR
CMU	CONCRETE MASONRY UNIT
CNTR	COUNTER
CO	CONDUIT ONLY (INCLUDE PULL ROPE)
COL	COLUMN
COMM	COMMUNICATIONS
CONC	CONCRETE
CONN	CONNECTION
CONT	CONTINUOUS
CTR	CENTER
DET	DETAIL
DIA	DIAMETER
DIM	DIMENSION
DR	DOOR
DWR	DRAWER
E	EAST
(E)	EXISTING
EA	EACH
EGB	EXTERNAL GROUND BAR
ELEC	ELECTRICAL
ELEV	ELEVATOR/ELEVATION
EQ	EQUAL
EQUIP	EQUIPMENT
ES	EACH SIDE
E.W.	EACH WAY
EXT	EXTERIOR
FDN	FOUNDATION
FF	FINISH FACE
FIN	FINISH
FIXT	FIXTURE
FLR	FLOOR
FOF	FACE OF FINISH
FRP	FIBERGLASS
FT	FOOT OR FEET
F.T.	FUEL TANK
GA	GAUGE
GALV	GALVANIZED
GC	GENERAL CONTRACTOR
GL	GLASS
GR	GRADE
GYP	GYPSUM
GEN	GENERATOR
HC	HOLLOW CORE
HD GALV	HOT DIPPED ZINC PLATED
HDWD	HARDWOOD
HDWE	HARDWARE
HM	HOLLOW METAL
HORIZ	HORIZONTAL
HT	HEIGHT
HVAC	HEATING, VENTILATING & AIR CONDITIONING
INC	INCANDESCENT
INT	INTERIOR
J BOX	JUNCTION BOX
JT	JOINT
LAM	LAMINATE
LT	LIGHT
MAT	MATERIAL
MAX	MAXIMUM
MECH	MECHANICAL
MET	METAL
MFR	MANUFACTURER
MGB	MASTER GROUND BAR
MIN	MINIMUM
MISC	MISCELLANEOUS
MO	MASONRY OPENING
MTD	MOUNTED
MUL	MULLION
(N)	NEW
N	NORTH
(NA)	NOT APPLICABLE
NIC	NOT IN CONTRACT
NOM	NOMINAL
NTS	NOT TO SCALE
OC	ON CENTER
OD	OUTSIDE DIAMETER
OF–CI	OWNER FURNISHED–CONTRACTOR INSTALLED
OFNIC	OWNER FURNISHED–NOT IN CONTRACT
OPNG	OPENING
OPP	OPPOSITE
(P)	PROPOSED
P	PAINT
PART	PARTITION
PBX	TELEPHONE SWITCH BOARD
PD	PRODUCT OF COMBUSTION DETECTOR
PL	PLATE
PL LAM	PLASTIC LAMINATE
PLYWD	PLYWOOD
PR	PAIR
PRE–FAB	PREFABRICATED
PSI	POUNDS PER SQUARE INCH
PT	POINT
PTD	PAINTED
QTY	QUANTITY
(R)	RELOCATED
RAD	RADIUS
REFR	REFRIGERATOR
REQ	REQUIRED
RESIL	RESILIENT
RM	ROOM
RO	ROUGH OPENING
RUB	RUBBER
S	SOUTH
SC	SOLID CORE
SED	SEE ELECTRICAL DRAWING
SHT	SHEET
SIM	SIMILAR
SPEC	SPECIFICATION
SQ	SQUARE
SSD	SEE STRUCTURAL DRAWING
SST	STAINLESS STEEL
STD	STANDARD
STL	STEEL
STOR	STORAGE
STRL	STRUCTURAL
SUSP	SUSPENDED
T&B	TOP AND BOTTOM
TEL	TELEPHONE
THRESH	THRESHOLD
THK	THICK, THICKNESS
TOC	TOP OF CONCRETE
TS	TUBE STEEL
TSB	TOP SET BASE
TW	TOP OF WALL
TYP	TYPICAL
UNF	UNFINISHED
UON	UNLESS OTHERWISE NOTED
VB	VAPOR BARRIER
VENT	VENTILATION
VERT	VERTICAL
VIF	VERIFY IN FIELD
W	WEST
W/	WITH
WD	WOOD
W/O	WITHOUT
WT	WEIGHT

STANDARD NOTES AND SPECIFICATIONS

DIVISION 1 – GENERAL REQUIREMENTS

A. GENERAL CONDITIONS: THE REQUIREMENTS OF THE GENERAL CONDITIONS OF THE CONTRACT FOR CONSTRUCTION (AIA DOCUMENT A201–1987) APPLY TO THE EXECUTION OF THIS PROJECT IN ITS ENTIRETY.

B. OFCI REFERS TO ITEMS THAT ARE OWNER FURNISHED AND CONTRACTOR INSTALLED.

C. NIC REFERS TO ITEMS THAT ARE NOT IN CONTRACT.

D. DRAWINGS ARE NOT TO BE SCALED. WRITTEN DIMENSIONS TAKE PRECEDENCE. THIS SET OF PLANS ARE INTENDED TO BE USED FOR DIAGRAMMATIC PURPOSES ONLY, UNLESS NOTED OTHERWISE. THE CONTRACTOR'S SCOPE OF WORK SHALL INCLUDE FURNISHING ALL MATERIALS, EQUIPMENT, LABOR AND ANYTHING ELSE DEEMED NECESSARY TO COMPLETE INSTALLATIONS AS DESCRIBED HEREIN.

E. ALL WORK PERFORMED AND MATERIALS INSTALLED SHALL BE IN STRICT ACCORDANCE WITH ALL APPLICABLE CODES, REGULATIONS AND ORDINANCES. CONTRACTOR SHALL GIVE ALL NOTICES AND COMPLY WITH ALL LAWS, ORDINANCES, RULES, REGULATIONS AND LAWFUL ORDERS OF ANY PUBLIC AUTHORITY REGARDING THE PERFORMANCE OF THE WORK. MECHANICAL AND ELECTRICAL SYSTEMS SHALL BE INSTALLED IN ACCORDANCE WITH ALL APPLICABLE MUNICIPAL AND UTILITY COMPANY SPECIFICATIONS AND LOCAL AND STATE JURISDICTIONAL CODES, ORDINANCES AND APPLICABLE REGULATIONS.

F. THE ENGINEER HAS MADE EVERY EFFORT TO DETAIL THE COMPLETE SCOPE OF WORK IN THE CONSTRUCTION AND CONTRACT DOCUMENTS. CONTRACTORS ARE NEVERTHELESS CAUTIONED THAT MINOR OMISSIONS OR ERRORS IN THE DRAWINGS OR SPECIFICATIONS SHALL NOT EXCUSE SAID CONTRACTOR FROM COMPLETING THE PROJECT AND IMPROVEMENTS IN ACCORDANCE WITH THE INTENT OF THE DOCUMENTS. THE CONTRACTOR SHALL BEAR THE RESPONSIBILITY OF NOTIFYING THE ENGINEER IN WRITING OF ANY CONFLICTS, ERRORS OR OMISSIONS PRIOR TO THE CONTRACTOR'S PROPOSAL. IN THE EVENT OF DISCREPANCIES THE CONTRACTOR SHALL PRICE THE MORE EXPENSIVE OR EXTENSIVE WORK UNLESS DIRECTED OTHERWISE.

G. ALL DRAWINGS ARE INTERRELATED. IN PERFORMANCE OF THE WORK, THE CONTRACTOR MUST REFER TO ALL DRAWINGS. ALL COORDINATION IS THE RESPONSIBILITY OF THE CONTRACTOR.

H. DETAILS INCLUDED HEREIN ARE INTENDED TO SHOW THE END RESULT OF DESIGN. MINOR MODIFICATIONS MAY BE REQUIRED TO SUIT JOB CONDITIONS OR SITUATIONS AND SUCH MODIFICATIONS SHALL BE INCLUDED AS PART OF THE SCOPE OF WORK.

I. THE CONTRACTOR INVOLVED SHALL VISIT THE JOB SITE AND FAMILIARIZE THEMSELVES WITH ALL CONDITIONS AFFECTING THE PROPOSED PROJECT, WITH THE CONSTRUCTION AND CONTRACT DOCUMENTS, AND CONFIRM THAT THE PROJECT MAY BE ACCOMPLISHED AS SHOWN PRIOR TO PROCEEDING WITH CONSTRUCTION. ANY ERRORS, OMISSIONS OR DISCREPANCIES ARE TO BE BROUGHT TO THE ATTENTION OF THE CONSTRUCTION MANAGER.

J. CONTRACTOR SHALL VERIFY ALL MEASUREMENTS AT THE SITE BEFORE ORDERING ANY MATERIALS OR DOING ANY WORK. NO EXTRA CHARGE OR COMPENSATION SHALL BE ALLOWED DUE TO DIFFERENCES BETWEEN ACTUAL DIMENSIONS AND DIMENSIONS INDICATED ON THE CONSTRUCTION DRAWINGS. SUBMIT ANY DISCREPANCY IN DIMENSIONS TO THE CONSTRUCTION MANAGER FOR CONSIDERATION BEFORE PROCEEDING WITH WORK IN THE AFFECTED AREA.

K. NO PLEA OF IGNORANCE OF CONDITIONS THAT EXIST OR OF THE DIFFICULTIES OR CONDITIONS THAT MAY BE ENCOUNTERED OR ANY OTHER RELEVANT MATTER CONCERNING THE WORK TO BE PERFORMED IN THE EXECUTION OF THE WORK WILL BE ACCEPTED AS AN EXCUSE FOR FAILURE OR OMISSION ON THE PART OF THE CONTRACTOR TO FULFILL EVERY DETAIL OF THE REQUIREMENTS GOVERNING THE WORK.

L. THE CONTRACTOR SHALL RECEIVE WRITTEN AUTHORIZATION TO PROCEED WITH CONSTRUCTION PRIOR TO STARTING WORK ON ANY ITEM THAT IS NOT CLEARLY DEFINED BY THE CONSTRUCTION DRAWINGS DOCUMENTS.

M. THE CONTRACTOR SHALL SUPERVISE AND DIRECT THE PROJECT DESCRIBED HEREIN. THE CONTRACTOR SHALL BE SOLELY RESPONSIBLE FOR ALL CONSTRUCTION MEANS, METHODS, TECHNIQUES, SEQUENCES AND PROCEDURES, SUBJECT TO APPROVAL OF CONSTRUCTION MANAGER AND FOR COORDINATING ALL PORTIONS OF THE WORK UNDER THE CONTRACT.

N. THE CONTRACTOR SHALL FAMILIARIZE HIMSELF WITH AND INSTALL ALL EQUIPMENT AND MATERIALS ACCORDING TO THE MANUFACTURER'S SPECIFICATIONS UNLESS NOTED OTHERWISE OR WHERE LOCAL CODES AND ORDINANCES TAKE PRECEDENCE.

O. THE CONTRACTOR SHALL PROVIDE AT THE PROJECT SITE A FULL SET OF CONSTRUCTION DOCUMENTS UPDATED WITH THE LATEST REVISIONS AND ADDENDUM OR CLARIFICATION AND THE BUILDING PERMIT FOR USE BY ALL PERSONNEL INVOLVED WITH THE PROJECT.

P. PROVIDE A PORTABLE FIRE EXTINGUISHER WITH A RATING OF NOT LESS THAN 2–A OR 2–10BC WITHIN 75 FEET TRAVEL DISTANCE TO ALL PORTIONS OF THE PROJECT AREA DURING CONSTRUCTION.

Q. THE EXISTING STRUCTURAL COMPONENTS OF THIS PROJECT SITE ARE NOT TO BE ALTERED BY THIS CONSTRUCTION PROJECT UNLESS NOTED OTHERWISE.

R. THE CONTRACTOR SHALL MAKE NECESSARY PROVISIONS TO PROTECT EXISTING IMPROVEMENTS, EASEMENTS, PAVING, CURBING, ETC., DURING CONSTRUCTION. UPON COMPLETION OF WORK, CONTRACTOR SHALL REPAIR ANY DAMAGE THAT MAY HAVE OCCURRED DUE TO CONSTRUCTION ON OR ABOUT THE PROPERTY.

S. CONTRACTOR SHALL KEEP THE GENERAL AREA CLEAN AND HAZARD FREE DURING CONSTRUCTION AND DISPOSE OF ALL DIRT, DEBRIS, AND RUBBISH AND REMOVE EQUIPMENT NOT SPECIFIED AS REMAINING ON THE PROPERTY. PREMISES SHALL BE LEFT IN CLEAN CONDITION AND FREE FROM DUST, PAINT SPOTS OR SMUDGES OF ANY NATURE.

L. D. STROBEL CO. INC.
DESIGN / CONSTRUCTION
WIRELESS COMMUNICATIONS
1022 SHARY CIRCLE, SUITE 9, CONCORD, CA. 94518
PHONE: 925–686–3241 FAX: 925–686–3350

REGISTERED PROFESSIONAL ENGINEER
CONRAD L. ALFARO
NO C 28699
EXPIRE 3-31-17
CIVIL
STATE OF CALIFORNIA

REVISIONS

NO.	DATE	DESCRIPTION
1	6/8/15	PRELIMINARY
2	6/10/15	90% ZD
2	6/22/15	95% ZD

SUNNYVALE FIRE STATION 5
160' MONOPOLE
1210 BORDEAUX DRIVE
SUNNYVALE, CA 94089

DRAWN: MRB | DATE: 6/9/15
FILE: 6638–G1
SHEET NO.
G–1

MADE IN U.S.A.

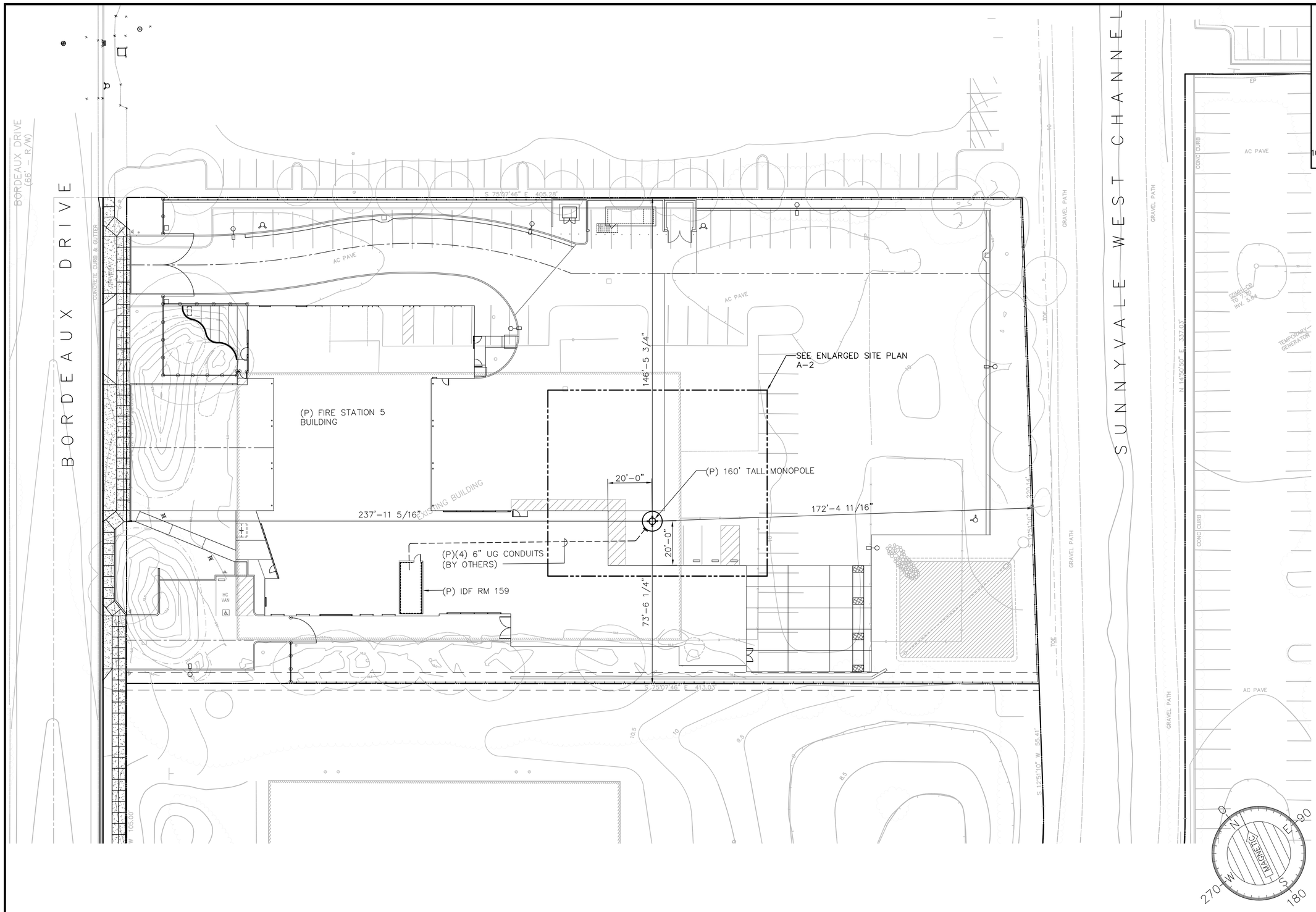

MAGNETIC DECLINATION ≅ 14.5°

0 5'10' 20' 40' 60'

SCALE: 1"=20'–0"

OVERALL SITE PLAN
SCALE: 1" = 20'

1
A–1

L. D. STROBEL CO. INC.
DESIGN / CONSTRUCTION
WIRELESS COMMUNICATIONS
1022 SHARY CIRCLE, SUITE 9, CONCORD, CA. 94518
PHONE: 925–686–3241 FAX: 925–686–3350

REGISTERED PROFESSIONAL ENGINEER
CONRAD L. ALFARO
NO C 28699
EXPIRE 3-31-17
CIVIL
STATE OF CALIFORNIA

REVISIONS

NO.	DATE	DESCRIPTION
1	6/8/15	PRELIMINARY
2	6/10/15	90% ZD

SUNNYVALE FIRE STATION 5
160' MONOPOLE
1210 BORDEAUX DRIVE
SUNNYVALE, CA 94089

DRAWN: MRB DATE: 6/22/15
FILE: 6638–A1
SHEET NO.

A–1

MADE IN U.S.A.

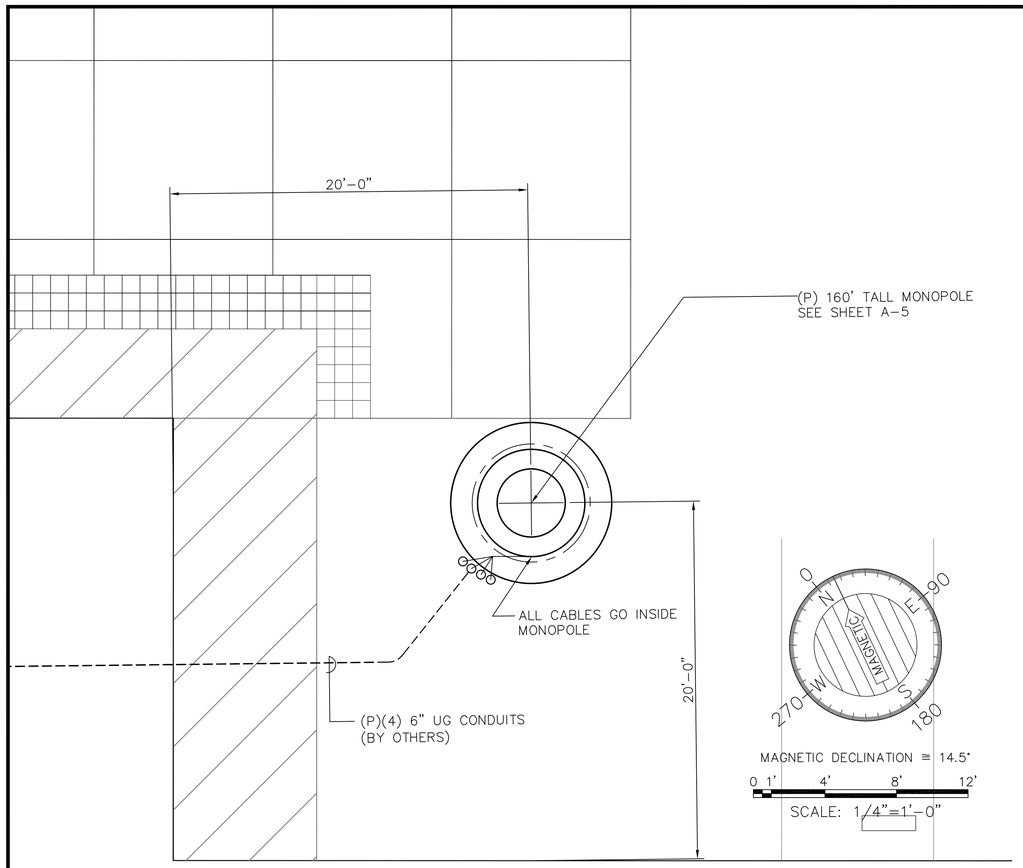

ENLARGED SITE PLAN
SCALE: 1/4"=1'-0"
1
A-2

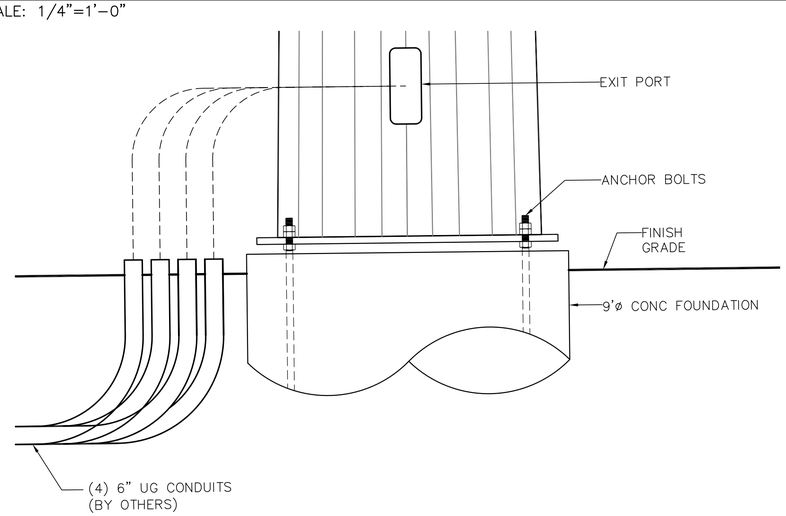

MONOPOLE DETAIL
SCALE: 1/2"=1'-0"
2
A-2

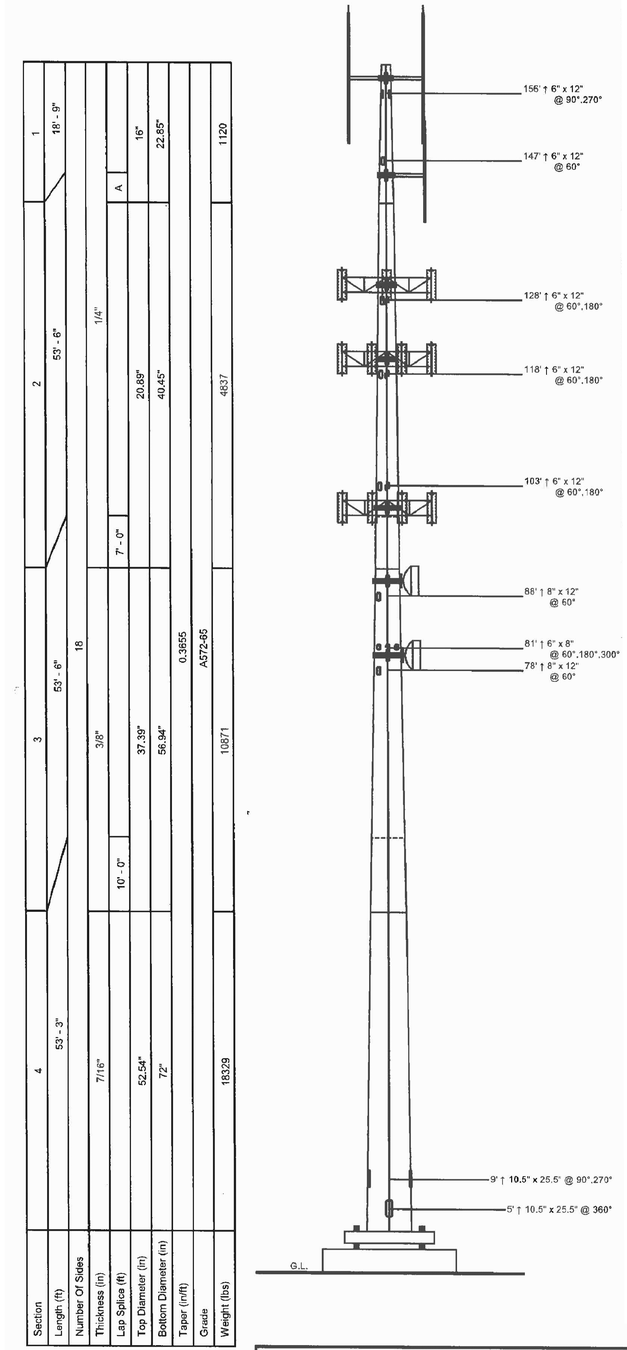

Section	Length (ft)	Number Of Sides	Thickness (in)	Lap Splice (ft)	Top Diameter (in)	Bottom Diameter (in)	Taper (in/ft)	Grade	Weight (lbs)
1	18' - 9"	A	16"		22.85"			1120	
2	53' - 6"	1 1/4"	20.89"	7' - 0"	40.45"			4837	
3	53' - 6"	18	3/8"	10' - 0"	37.39"	56.94"	0.3655	A572-65	10871
4	53' - 3"		7/16"		52.54"	72"			18329

MONOPOLE ELEVATION
SCALE: N.T.S.
3
A-2

Sabre Industries
Towers and Poles

Sabre Communications Corporation
7101 Southbridge Drive
P.O. Box 658
Sioux City, IA 51102-0658
Phone: (712) 258-6690
Fax: (712) 279-0814

Information contained herein is the sole property of Sabre Communications Corporation, constitutes a trade secret as defined by Iowa Code Ch. 550 and shall not be reproduced, copied or used in whole or part for any purpose whatsoever without the prior written consent of Sabre Communications Corporation.

Job:	122834B
Customer:	LD STROBEL COMPANY INC
Site Name:	Santa Clara, CA
Description:	160' Monopole
Date:	5/20/2015 By: ARH

L. D. STROBEL CO. INC.
DESIGN / CONSTRUCTION
WIRELESS COMMUNICATIONS
1022 SHARY CIRCLE, SUITE 9, CONCORD, CA. 94518
PHONE: 925-686-3241 FAX: 925-686-3350

REGISTERED PROFESSIONAL ENGINEER
CONRAD L. ALFARO
NO C 28699
EXPIRE 3-31-17
CIVIL
STATE OF CALIFORNIA

REVISIONS

NO.	DATE	DESCRIPTION
1	6/8/15	PRELIMINARY
2	6/10/15	90% ZD

SUNNYVALE FIRE STATION 5
160' MONOPOLE
1210 BORDEAUX DRIVE
SUNNYVALE, CA 94089

DRAWN: MRB DATE: 6/22/15
FILE: 6638-A2
SHEET NO.
A-2

MADE IN U.S.A.

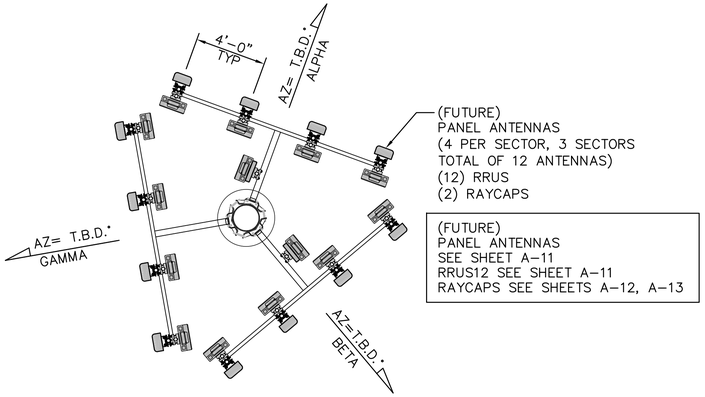

FUTURE ANTENNA PLANS @ 100', 120' AGL (2 / A-3)
SCALE: 1/4"=1'-0"

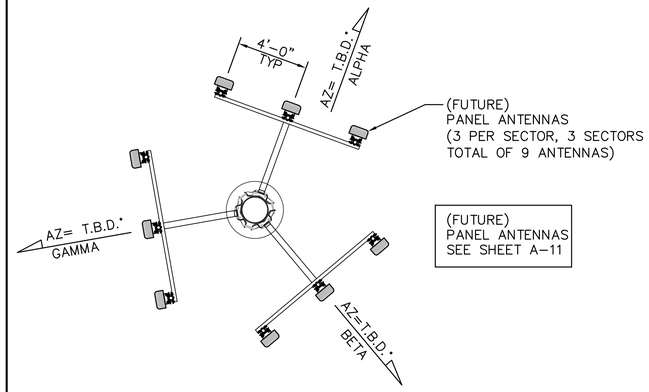

FUTURE ANTENNA PLAN @ 130' AGL (3 / A-3)
SCALE: 1/4"=1'-0"

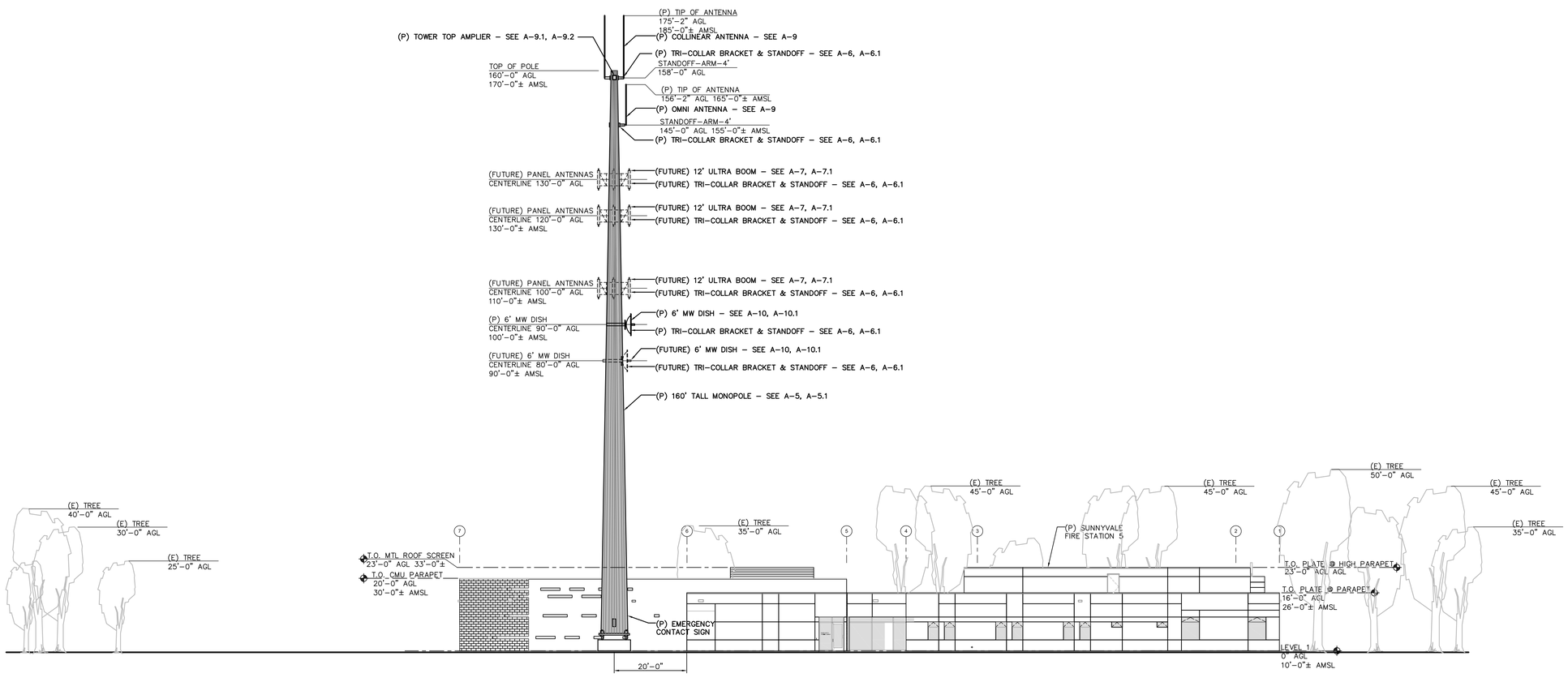

NORTH ELEVATION (1 / A-3)
SCALE: 1/16"=1'-0"

L. D. STROBEL CO. INC.
DESIGN / CONSTRUCTION
WIRELESS COMMUNICATIONS
1022 SHARY CIRCLE, SUITE 9, CONCORD, CA. 94518
PHONE: 925-686-3241 FAX: 925-686-3350

REGISTERED PROFESSIONAL ENGINEER
CONRAD L. ALPARGE
NO C 28699
EXPIRE 3-31-17
CIVIL
STATE OF CALIFORNIA

REVISIONS

NO.	DATE	DESCRIPTION
1	6/8/15	PRELIMINARY
2	6/10/15	90% ZD
2	6/22/15	95% ZD

SUNNYVALE FIRE STATION 5
160' MONOPOLE
1210 BORDEAUX DRIVE
SUNNYVALE, CA 94089

DRAWN: MRB | DATE: 6/30/15
FILE: 6638-A3
SHEET NO.
A-3

MADE IN U.S.A.

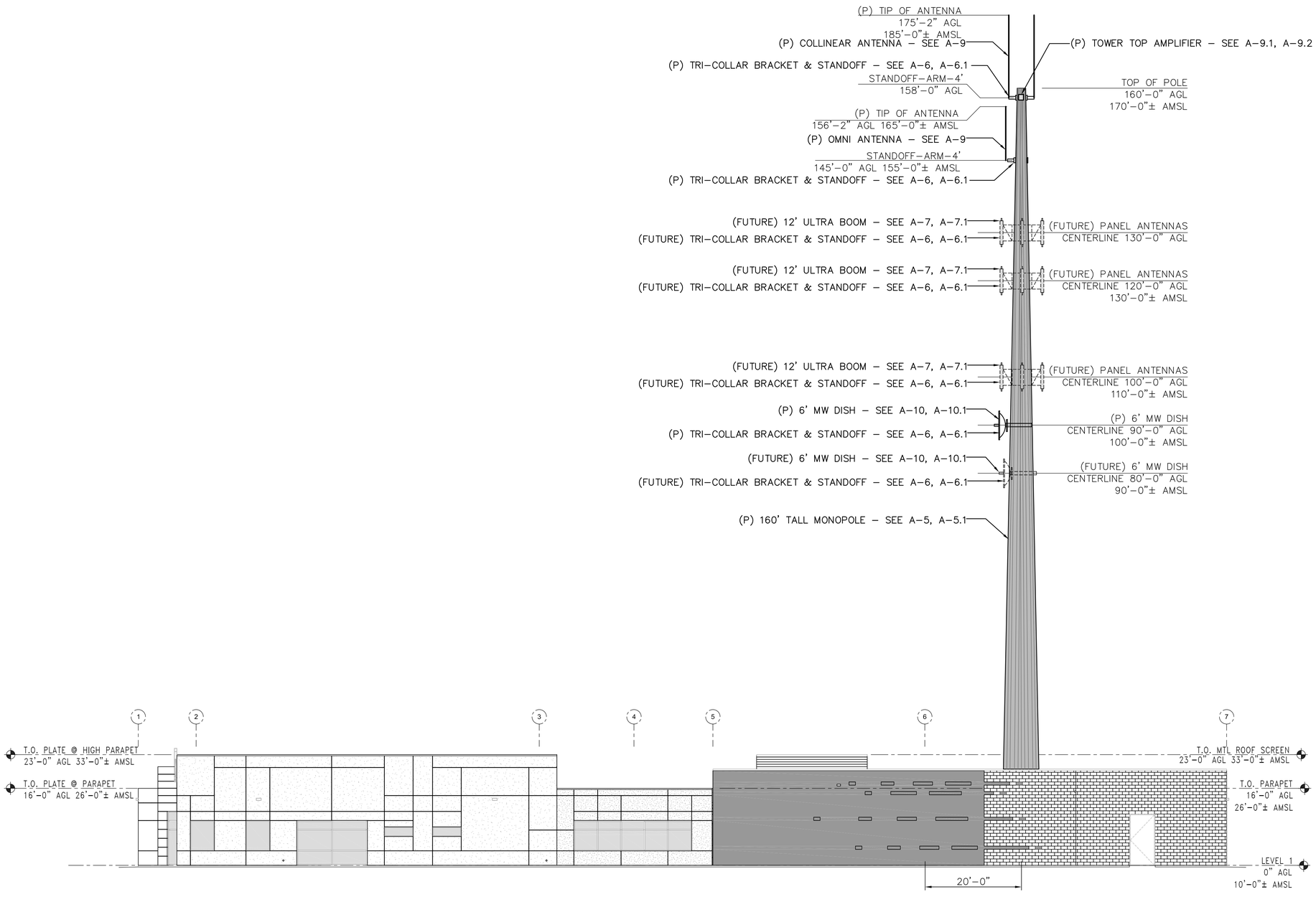

SOUTH ELEVATION (1 / A-3.1)
SCALE: 3/32"=1'-0"

L. D. STROBEL CO. INC.
DESIGN / CONSTRUCTION
WIRELESS COMMUNICATIONS
1022 SHARY CIRCLE, SUITE 9, CONCORD, CA. 94518
PHONE: 925-686-3241 FAX: 925-686-3350

REGISTERED PROFESSIONAL ENGINEER
CONRAD L. ALFARO
NO C 28699
EXPIRE 3-31-17
CIVIL
STATE OF CALIFORNIA

REVISIONS

NO.	DATE	DESCRIPTION
1	6/8/15	PRELIMINARY
2	6/10/15	90% ZD

SUNNYVALE FIRE STATION 5
160' MONOPOLE
1210 BORDEAUX DRIVE
SUNNYVALE, CA 94089

DRAWN: MRB | DATE: 6/22/15
FILE: 6638-A3.1
SHEET NO.

A-3.1

MADE IN U.S.A.

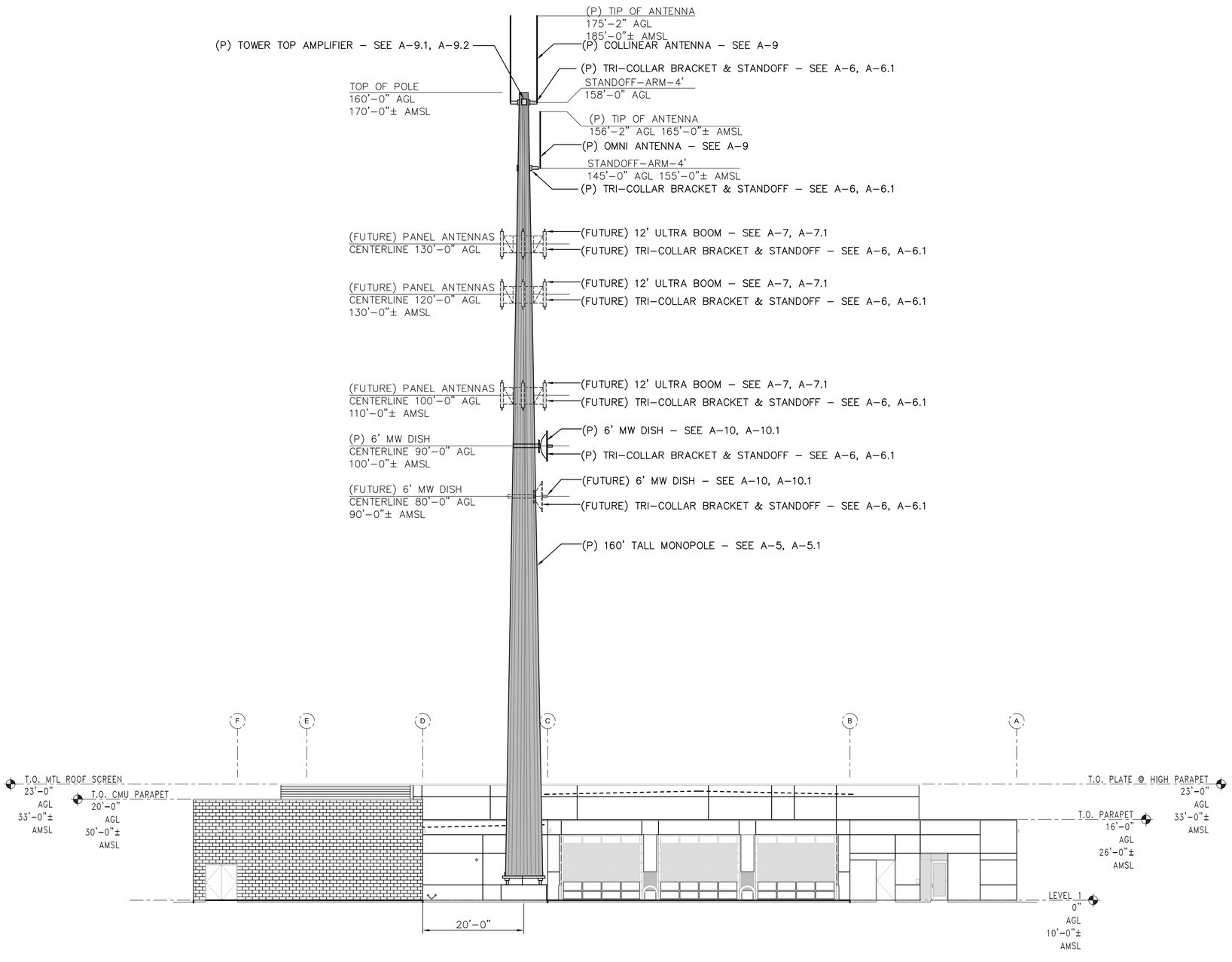

EAST ELEVATION (1 / A-4)
SCALE: 3/32"=1'-0"

L. D. STROBEL CO. INC.
DESIGN / CONSTRUCTION
WIRELESS COMMUNICATIONS
1022 SHARY CIRCLE, SUITE 9, CONCORD, CA. 94518
PHONE: 925-686-3241 FAX: 925-686-3350

REGISTERED PROFESSIONAL ENGINEER
CONRAD L. ALFARO
NO C 28899
EXPIRE 3-31-17
CIVIL
STATE OF CALIFORNIA

REVISIONS

NO.	DATE	DESCRIPTION
1	6/8/15	PRELIMINARY
2	6/10/15	90% ZD

SUNNYVALE FIRE STATION 5
160' MONOPOLE
1210 BORDEAUX DRIVE
SUNNYVALE, CA 94089

DRAWN: MRB | DATE: 6/22/15
FILE: 6638-A4
SHEET NO.

A-4

MADE IN U.S.A.

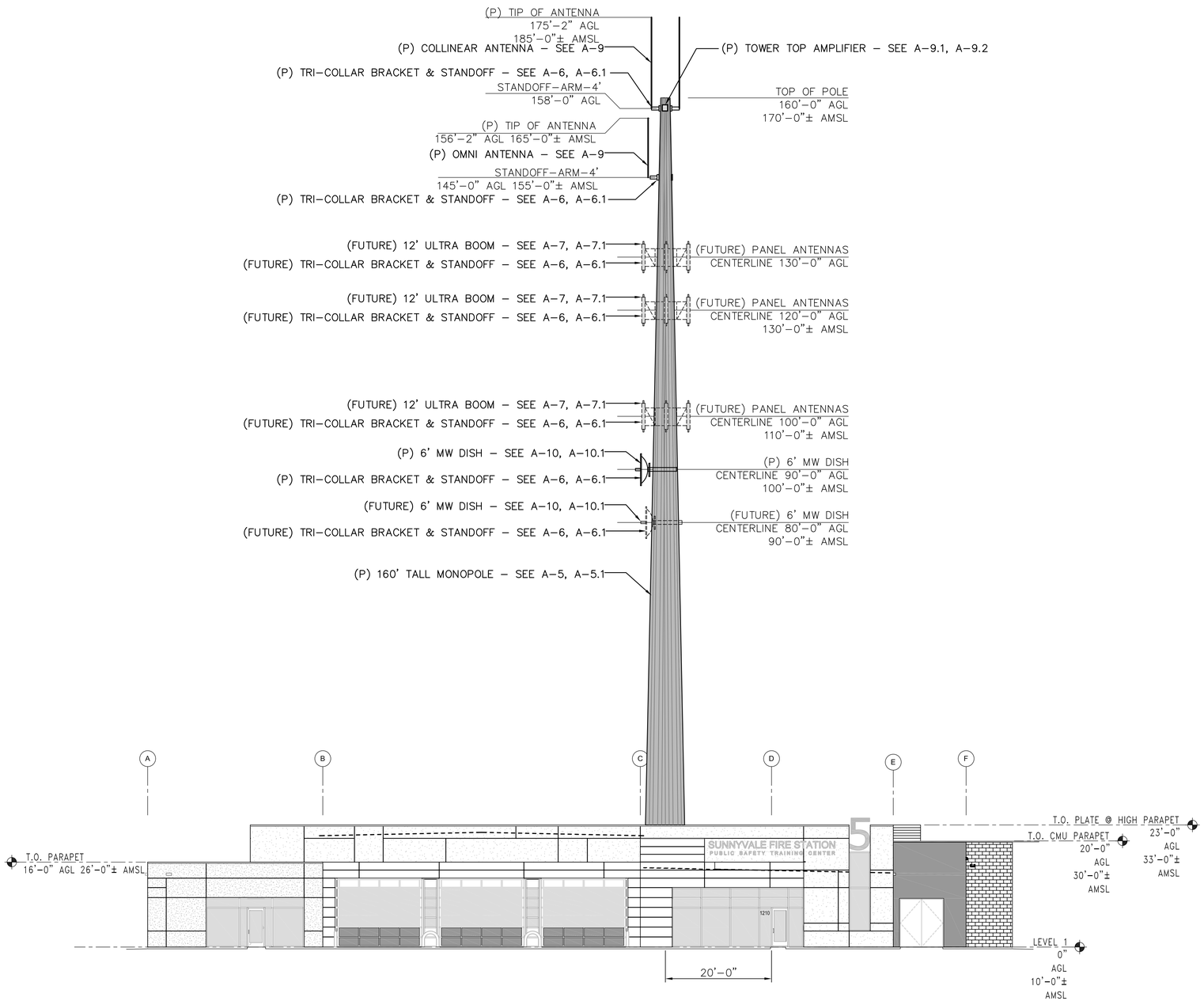

WEST ELEVATION (1 / A-4.1)
SCALE: 3/32"=1'-0"

L. D. STROBEL CO. INC.
DESIGN / CONSTRUCTION
WIRELESS COMMUNICATIONS
1022 SHARY CIRCLE, SUITE 9, CONCORD, CA. 94518
PHONE: 925-686-3241 FAX: 925-686-3350

REGISTERED PROFESSIONAL ENGINEER
CONRAD L. ALFARO
NO C 28899
EXPIRE 3-31-17
CIVIL
STATE OF CALIFORNIA

REVISIONS

NO.	DATE	DESCRIPTION
1	6/8/15	PRELIMINARY
2	6/10/15	90% ZD

SUNNYVALE FIRE STATION 5
160' MONOPOLE
1210 BORDEAUX DRIVE
SUNNYVALE, CA 94089

DRAWN: MRB | DATE: 6/22/15
FILE: 6638-A4.1
SHEET NO.
A-4.1

MADE IN U.S.A.

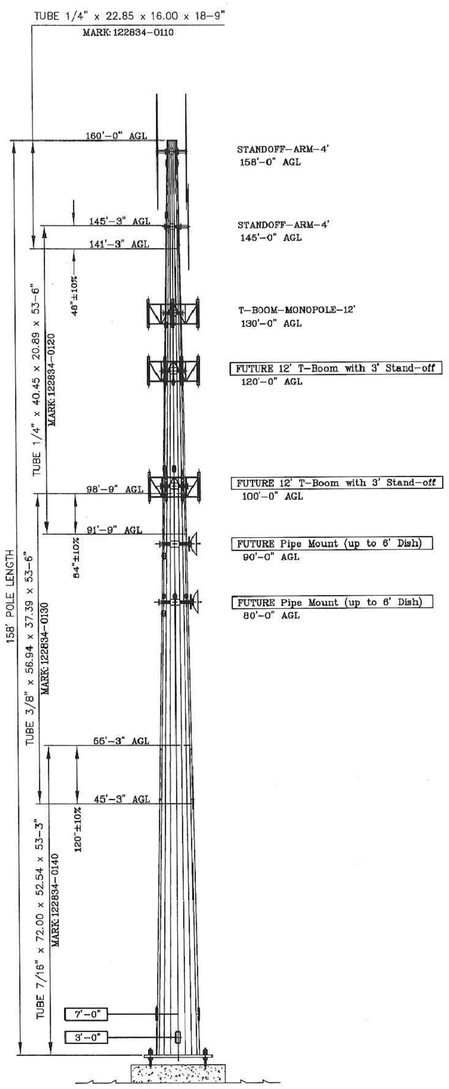

POLE ELEVATION

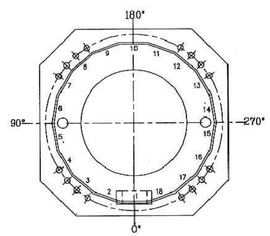

ACCESS PORT @ 3'-0"
ORIENT POLE IN THE FIELD TO SUIT

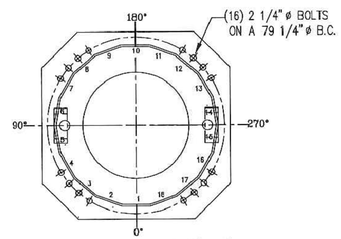

ACCESS PORT @ 7'-0"
ORIENT POLE IN THE FIELD TO SUIT

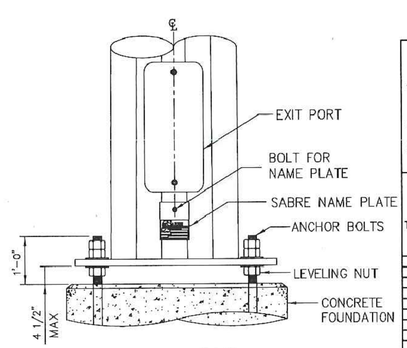

BASE INSTALLATION

NOTICE: ALL PARTS ARE TO BE INVENTORIED AND ANY SHORTAGES REPORTED WITHIN 48 HOURS OF DELIVERY. SHORTAGES REPORTED AFTER THIS TIME PERIOD WILL BE CHARGED TO THE CONTRACTOR. CALL 800/369-6690 ASK FOR THE CONTRACTS DEPARTMENT

DRAWING LIST

MONOPOLE ERECTION	122834-MM
MONOPOLE FOUNDATION(S)	122834-F1
MONOPOLE FABRICATION	122834-01
MOUNTS: TRI-COLLAR	C10112300
4' STANDOFF ARM	C10114
12' T-BOOM WITH 3' STAND-OFF	C10852564 C10899001
LIGHT-SIDELIGHT MOUNT	C30002002

REGISTERED PROFESSIONAL ENGINEER AMY R. HERBST 78733 CIVIL STATE OF CALIFORNIA
5/20/15

BOLT INSTALLATION DETAILS

1. INSTALLATION OF BOLTS: BOLTS FOR TOWERS AND ANTENNAS SHALL BE INSTALLED WITH THE NUTS FACING TO THE OUTSIDE AND/OR TO THE TOP OF THE TOWER, UNLESS PROHIBITED BY LACK OF CLEARANCE.
2. TIGHTENING OF BOLTS: ALL HIGH STRENGTH BOLTS SHALL BE TIGHTENED TO A SNUG-TIGHT CONDITION, AS DEFINED BY AISC.
3. NUT LOCKING DEVICE: ALL NUTS SHALL BE EQUIPPED WITH SOME TYPE OF NUT LOCKING DEVICE. SEE THE INDIVIDUAL DRAWINGS FOR THE TYPE OF NUT LOCKING DEVICE TO BE USED FOR EACH INDIVIDUAL APPLICATION.

UNLESS OTHERWISE SPECIFIED ALL DIMENSIONS INCLUDE FINISHES AND ARE IN INCHES
TOLERANCES: FRACTIONS ± 1/16" ANGLES ± 1/2 DEG. DECIMALS ± .010"
MATERIAL: TOLERANCES DO NOT APPLY TO RAW MATERIAL

Rev	DATE	DRW	CHK	DESCRIPTION

Sabre Industries Towers and Poles

CONFIDENTIAL
This Document and the information contained herein is the confidential trade secret property of Sabre Communication Corporation ("Sabre") and must not be reproduced, copied or used, in whole or in part, for any purpose without the prior written consent of Sabre. ©2015 Sabre Communications Corporation. All rights reserved.

LD STROBEL COMPANY INC
Santa Clara, CA
160.00 MONOPOLE

JOB 122834		SIZE B	DRAWING NO. 122834-MM	REV 0
DATE	19May15			
DRAWN BY	DLK	122834-E	SCALE N.T.S.	PAGE 1 of 1
CHECKED BY	WJ			

160' TALL MONOPOLE CUT-SHEETS
SCALE: NONE

L. D. STROBEL CO. INC.
DESIGN / CONSTRUCTION
WIRELESS COMMUNICATIONS
1022 SHARY CIRCLE, SUITE 9, CONCORD, CA. 94518
PHONE: 925-686-3241 FAX: 925-686-3350

REGISTERED PROFESSIONAL ENGINEER CONRAD L. ALPARGER NO C 28699 EXPIRE 3-31-17 CIVIL STATE OF CALIFORNIA

REVISIONS

NO.	DATE	DESCRIPTION
1	6/8/15	PRELIMINARY
2	6/10/15	90% ZD
2	6/22/15	95% ZD

SUNNYVALE FIRE STATION 5
160' MONOPOLE
1210 BORDEAUX DRIVE
SUNNYVALE, CA 94089

DRAWN: MRB DATE: 6/22/15
FILE: 6638-A5
SHEET NO.
A-5

MADE IN U.S.A.

*45° SPACING FROM CENTERLINE OF PIER TO THE CENTERLINE OF BOLT CLUSTER.

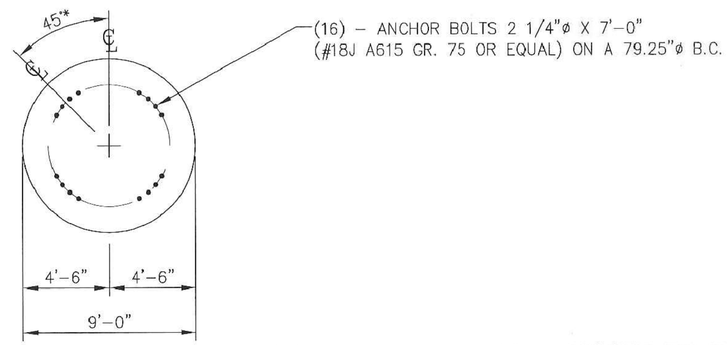

PLAN VIEW

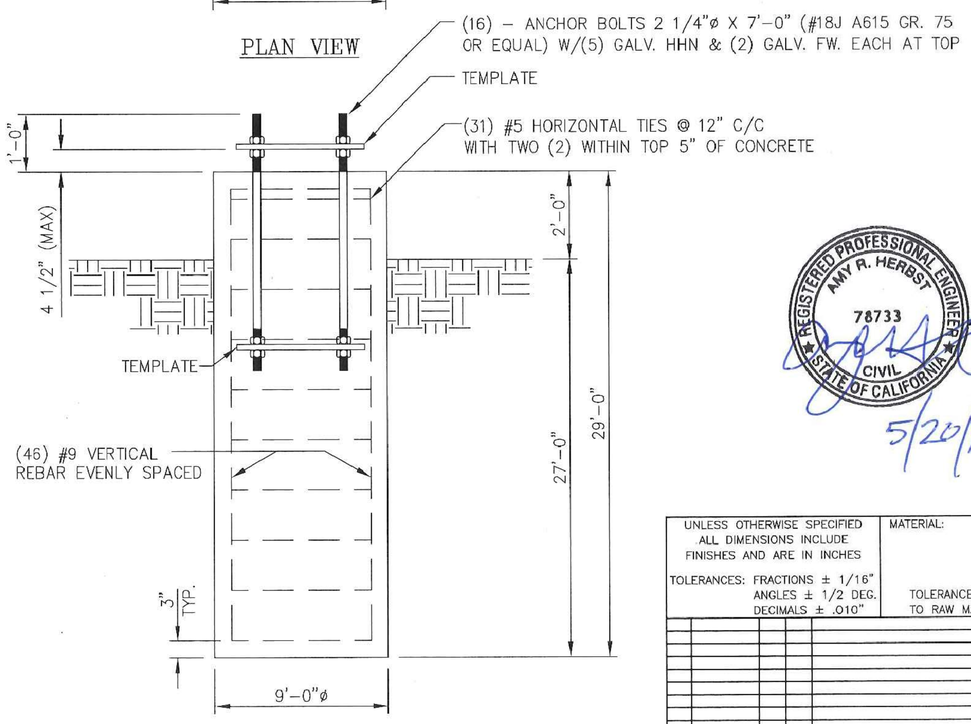

ELEVATION VIEW

REINFORCING STEEL SCHEDULE

LOCATION	NO REQ'D.	BAR SPC'G.	SIZE	CUT LGTH.	TOTAL LGTH.	TOTAL WT.	SHAPE
PIER VERTICAL REINFORCING	46	NOTED ON DWG.	#9	28'–6"	1311'–0"	4457 LBS.	STRAIGHT
PIER TIES	31	NOTED ON DWG.	#5	28'–3"	875'–9"	913 LBS.	8'–6" O.D.
				TOTAL REBAR WT.		5370 LBS.	

TOP & BOTTOM TEMPLATES
PART NO.: 122834-9001

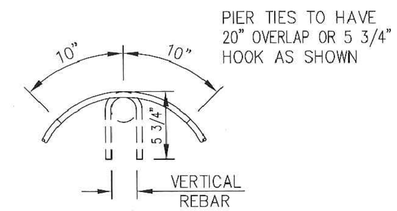

PIER TIE HOOK DETAIL

GENERAL NOTES:

1. ALL ANCHOR BOLTS AND VERTICAL REINFORCING BARS ARE TO BE SECURELY TIED BEFORE CONCRETE IS PLACED SO THEY WILL REMAIN PARALLEL TO THE CENTERLINE OF THE PIER.
2. THE GROUND ELEVATION SHALL BE A MAXIMUM OF 2'–0" BELOW THE TOP OF THE PIER.
3. ALL EXPOSED CONCRETE CORNERS ARE TO BE CHAMFERED 3/4 INCH.
4. ALL REINFORCING STEEL SHALL CONFORM TO ASTM A615 GRADE 60 DEFORMED BARS.
5. CONCRETE SHALL HAVE A MINIMUM 28 DAY COMPRESSIVE STRENGTH OF 4000 PSI, IN ACCORDANCE WITH ACI 318–05.
6. REINFORCING STEEL TO HAVE A 3" MINIMUM CONCRETE COVER.
7. FOUNDATION DESIGN IS BASED ON THE GEOTECHNICAL REPORT BY TRC, PROJECT NO. 198195.3, DATED JANUARY 14, 2014 (REVISED).
8. ANCHOR BOLTS 2 1/4"ø X 7'–0" (#18J A615 GR. 75 OR EQUAL) ON A 79.25"ø BOLT CIRCLE (16 REQ'D).
9. CONCRETE REQUIRED 68.33 CUBIC YARDS.
10. SEE THE GEOTECHNICAL REPORT FOR DRILLED PIER INSTALLATION REQUIREMENTS, IF SPECIFIED.
11. THE FOUNDATION IS BASED ON THE FOLLOWING FACTORED LOADS:
    MOMENT (KIP–FT) = 2762.59
    AXIAL (KIPS) = 51
    SHEAR (KIPS) = 30.98

REGISTERED PROFESSIONAL ENGINEER AMY R. HERBST 78733 CIVIL STATE OF CALIFORNIA
5/20/15

UNLESS OTHERWISE SPECIFIED ALL DIMENSIONS INCLUDE FINISHES AND ARE IN INCHES
TOLERANCES: FRACTIONS ± 1/16" ANGLES ± 1/2 DEG. DECIMALS ± .010"
MATERIAL:
TOLERANCES DO NOT APPLY TO RAW MATERIAL

REV	DATE	DRW	CHK	DESCRIPTION

Sabre Industries™ Towers and Poles

CONFIDENTIAL
This document and the information contained herein is the confidential trade secret property of Sabre Communications Corporation ("Sabre") and must not be reproduced, copied or used, in whole or in part, for any purpose without the prior written consent of Sabre.
© 2015 Sabre Communications Corporation. All rights reserved.

LD STROBEL COMPANY INC
SANTA CLARA, CA
160.00 MONOPOLE

JOB NO. 122834		SIZE	DRAWING NO.	REV
DATE	5/20/15	B	122834–F1	0
DRAWN BY	DLK		SCALE	PAGE
CHECKED BY	WJ		None	1 OF 1

160' TALL MONOPOLE CUT–SHEETS
SCALE: NONE

L. D. STROBEL CO. INC.
DESIGN / CONSTRUCTION
WIRELESS COMMUNICATIONS
1022 SHARY CIRCLE, SUITE 9, CONCORD, CA. 94518
PHONE: 925-686-3241 FAX: 925-686-3350

REGISTERED PROFESSIONAL ENGINEER CONRAD L. ALPARGER NO C 28899 EXPIRE 3-31-17 CIVIL STATE OF CALIFORNIA

REVISIONS

NO.	DATE	DESCRIPTION
1	6/8/15	PRELIMINARY
2	6/10/15	90% ZD
2	6/22/15	95% ZD

SUNNYVALE FIRE STATION 5
160' MONOPOLE
1210 BORDEAUX DRIVE
SUNNYVALE, CA 94089

DRAWN: MRB DATE: 6/19/15
FILE: 6638–A5.1
SHEET NO.
A-5.1

MADE IN U.S.A.

C10112300 TRI-COLLAR ASSEMBLY (10"-40" MONOPOLE)				
ITEM	QTY.	PART. NO.	DESCRIPTION	WEIGHT
1.	3	CW00835	WELDMENT, TRI-COLLAR (10"-40" MONOPOLE)	151
2.	6	C40094012	THREADED ROD ASSEMBLY 5/8 X 2'-9"	25
3.	6	C40094002	THREADED ROD ASSEMBLY 5/8 X 1'-6"	17
			TOTAL WEIGHT	193

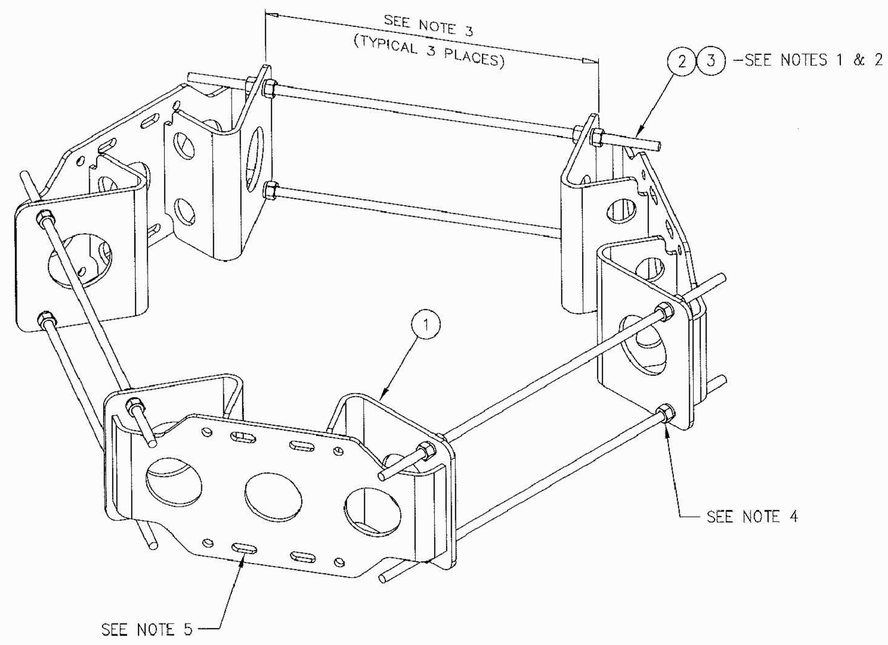

ISOMETRIC VIEW

NOTES:

1. THERE ARE (2) LENGTHS OF THREADED ROD SUPPLIED TO ACCOMMODATE DIAMETERS LISTED BELOW
   USE 5/8 X 1'-6" THREADED ROD ASSEMBLY FOR 10"-24" MONOPOLE DIAMETERS
   USE 5/8 X 2'-9" THREADED ROD ASSEMBLY FOR 24"-40" MONOPOLE DIAMETERS (SEE NOTE 2)
2. THREADED ROD MAY BE SHORTENED IF REQUIRED, FIELD CUT AND COLD GALV SPRAY TO SUIT.
3. THIS DISTANCE MUST BE EQUAL IN ALL (3) THREE LOCATIONS TO ENSURE THE STRUCTURAL INTEGRITY OF THE THREADED RODS AS WELL AS 120° SEPARATION.
4. FOR MONOPOLES 13" DIA. OR SMALLER, ONLY (1) ONE NUT AND (1) ONE LOCKWASHER ARE REQUIRED BETWEEN THE TRI-COLLAR BRACKETS.
   FOR MONOPOLES LARGER THAN 13" DIA., (2) TWO NUTS AND (2) TWO LOCKWASHERS ARE REQUIRED BETWEEN THE TRI-COLLAR BRACKETS.
5. THE MOUNTING SLOTS NOTED WILL ACCOMMODATE 2 3/8"-4 1/2" O.D. MOUNTING PIPES.

UNLESS OTHERWISE SPECIFIED
ALL DIMENSIONS INCLUDE FINISHES AND ARE IN INCHES
TOLERANCES: FRACTIONS ± 1/16"
ANGLES ± 1/2 DEG.
DECIMALS ± .010"

MATERIAL:
TOLERANCES DO NOT APPLY TO RAW MATERIAL

REV	DATE	DRW	CHK	DESCRIPTION
2	8/11/10	DLW	DEL	ADDED 5/8 X 1'-6" THREADED ROD
1	1/6/10	MLC	MC	REDRAWN IN AUTOCAD

Sabre Industries™
Towers and Poles

CONFIDENTIAL
This document and the information contained herein is the confidential trade secret property of Sabre Communications Corporation ("Sabre") and must not be reproduced, copied or used, in whole or in part, for any purpose without the prior written consent of Sabre.
© 2014 Sabre Communications Corporation. All rights reserved.

TRI-COLLAR BRACKET ASSEMBLY
FOR MONOPOLES (10"-40" DIA.)
(CIRCUMFERENCE 31.4" TO 125.7")

		SIZE	DRAWING NO.	REV
DATE	8/21/09	B	C10112300	2
DRAWN BY	JV		SCALE None	PAGE 1 OF 1
CHECKED BY	MLC			

TRI-COLLAR BRACKET ASSEMBLY CUT-SHEETS
SCALE: NONE

L. D. STROBEL CO. INC.
DESIGN / CONSTRUCTION
WIRELESS COMMUNICATIONS
1022 SHARY CIRCLE, SUITE 9, CONCORD, CA. 94518
PHONE: 925-686-3241 FAX: 925-686-3350

REGISTERED PROFESSIONAL ENGINEER
CONRAD L. ALEXANDER
NO C 28699
EXPIRE 3-31-17
CIVIL
STATE OF CALIFORNIA

REVISIONS

NO.	DATE	DESCRIPTION
1	6/8/15	PRELIMINARY
2	6/10/15	90% ZD
2	6/22/15	95% ZD

SUNNYVALE FIRE STATION 5
160' MONOPOLE
1210 BORDEAUX DRIVE
SUNNYVALE, CA 94089

DRAWN: MRB DATE: 6/22/15
FILE: 6638-A6
SHEET NO.
A-6

MADE IN U.S.A.

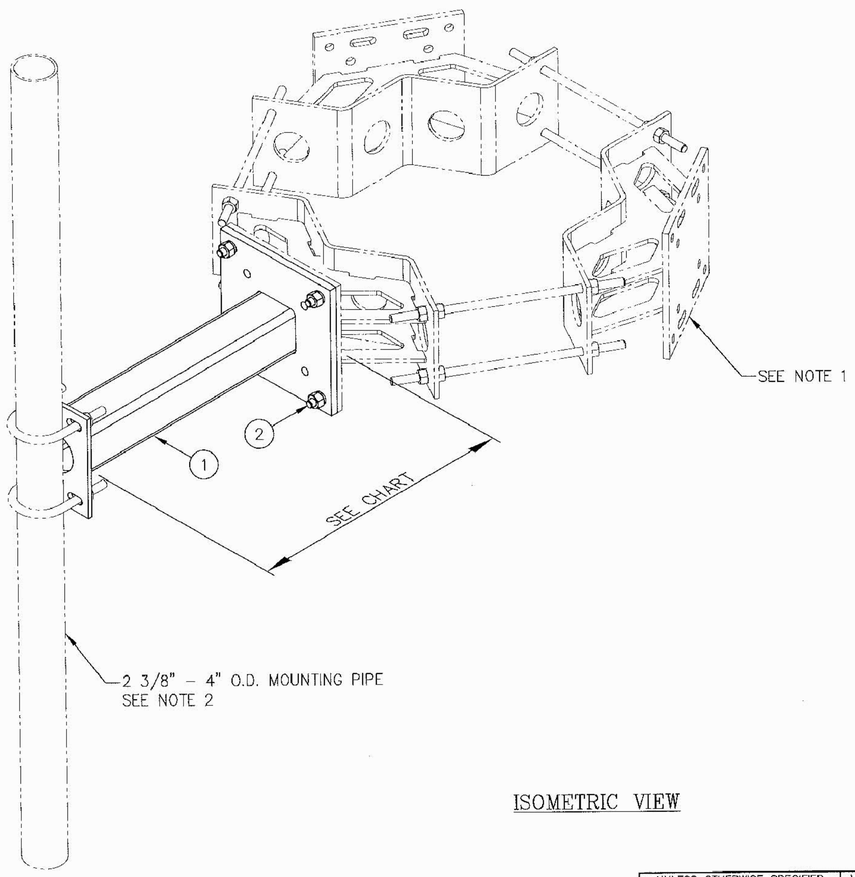

ISOMETRIC VIEW

LIST OF MATERIAL					
ITEM	KIT NO.	DWG. NO.	QTY.	DESCRIPTION	WEIGHT
1	C10114001	CW00484	1	1'–0" STANDOFF ARM WELDMENT	38.0#
	C10114002	CW00018	1	2'–0" STANDOFF ARM WELDMENT	50.6#
	C10114003	CW00525	1	3'–0" STANDOFF ARM WELDMENT	63.3#
	C10114004	CW00019	1	4'–0" STANDOFF ARM WELDMENT	76.0#
	C10114005	CW00526	1	5'–0" STANDOFF ARM WELDMENT	88.7#
	C10114006	CW00020	1	6'–0" STANDOFF ARM WELDMENT	101.4#
	C10114007	CW01019	1	0'–8" STANDOFF ARM WELDMENT	33.7#

TYPICAL HARDWARE				
ITEM	PART NO.	QTY.	DESCRIPTION	WEIGHT
2	C40026025	4	BOLT ASSEMBLY, 5/8"ø X 2 1/2 A325	2.0#

NOTES:

1. TRI–COLLAR MOUNTS ARE SHOWN TYPICAL AND MUST BE PURCHASED SEPARATELY.
2. 2 3/8" TO 4" O.D. MOUNTING PIPE & U–BOLTS MUST BE PURCHASED SEPARATELY.
3. QUANTITIES SHOWN ARE FOR ONE (1) STANDOFF ARM.

UNLESS OTHERWISE SPECIFIED
ALL DIMENSIONS INCLUDE
FINISHES AND ARE IN INCHES
TOLERANCES: FRACTIONS ± 1/16"
ANGLES ± 1/2 DEG.
DECIMALS ± .010"

MATERIAL:
TOLERANCES DO NOT APPLY TO RAW MATERIAL

REV	DATE	DRW	CHK	DESCRIPTION
6	9/13/11	DPJ	CE	ADDED 0'–8" STANDOFF ARM & UPDATED TITLE BLOCK.
5	6/16/07	MLC	MC	REDRAWN, ADDED 3' & 5' STANDOFF ARMS
4	10/10/06	MLC	MC	ADDED 1'–0" STANDOFF ARM.
3	10/12/04	MLC	MC	REVISED MOUNTING PIPE SIZE & WEIGHTS.
2	10/11/04	MLC	MC	REVISED MOUNTING PIPE SIZE & WEIGHTS.
1	4/17/03	JKW	MLC	UPDATED PART NUMBERS.

Sabre Industries™
Towers and Poles

CONFIDENTIAL
This document and the information contained herein is the confidential trade secret property of Sabre Communications Corporation ("Sabre") and must not be reproduced, copied or used, in whole or in part, for any purpose without the prior written consent of Sabre.
© 2014 Sabre Communications Corporation. All rights reserved.

STANDOFF ARM
(FITS 2 3/8"ø TO 4"ø MOUNTING PIPE)

		SIZE	DRAWING NO.	REV
DATE	8/26/00	B	C10114	6
DRAWN BY	KLE			
CHECKED BY	BCT		SCALE None	PAGE 1 OF 1

STANDOFF ARM CUT–SHEETS
SCALE: NONE

L. D. STROBEL CO. INC.
DESIGN / CONSTRUCTION
WIRELESS COMMUNICATIONS
1022 SHARY CIRCLE, SUITE 9, CONCORD, CA. 94518
PHONE: 925–686–3241 FAX: 925–686–3350

REGISTERED PROFESSIONAL ENGINEER
CONRAD L. ALPARGER
NO C 28699
EXPIRE 3-31-17
CIVIL
STATE OF CALIFORNIA

REVISIONS

NO.	DATE	DESCRIPTION
1	6/8/15	PRELIMINARY
2	6/10/15	90% ZD
2	6/22/15	95% ZD

SUNNYVALE FIRE STATION 5
160' MONOPOLE
1210 BORDEAUX DRIVE
SUNNYVALE, CA 94089

DRAWN: MRB DATE: 6/22/15
FILE: 6638–A6.1
SHEET NO.
A-6.1

MADE IN U.S.A.

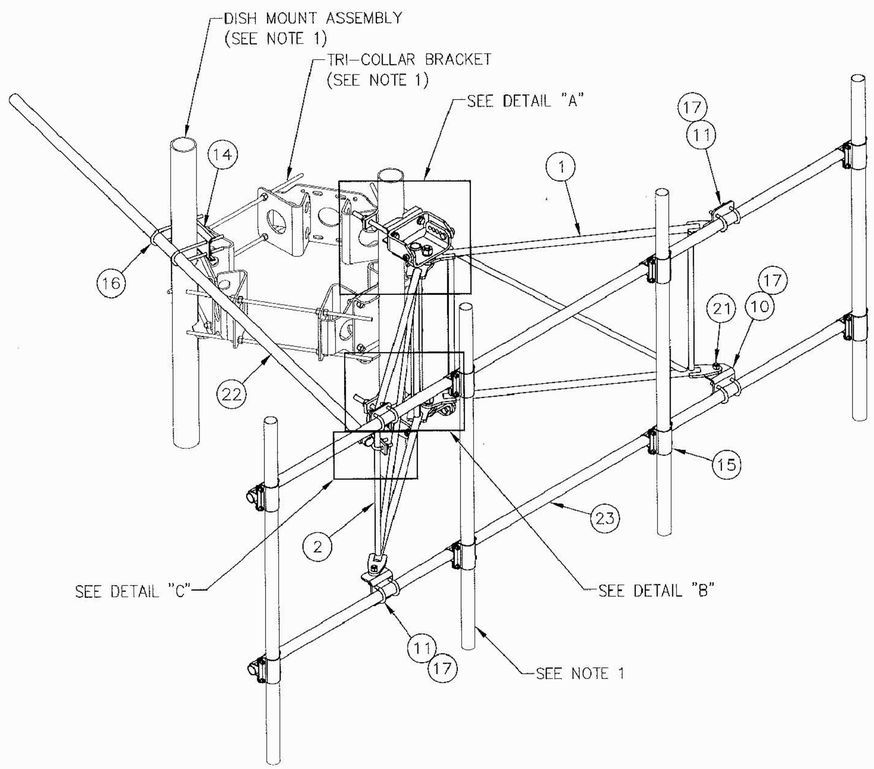

ISOMETRIC VIEW

C10852564 12' ULTRA-BOOM ASSEMBLY (3' STANDOFF)

(1)	C10014001	3' STANDOFF KIT, ULTRA-BOOM	183
(1)	CK00090	ULTRA-BOOM KIT	75
(1)		MISCELLANEOUS MATERIAL	95
		TOTAL WEIGHT	353

C10014001 KIT LIST OF MATERIAL (3' STANDOFF)

ITEM	QTY.	PART NO.	DESCRIPTION	WEIGHT
1.	1	CW00872	WELDMENT, 3' STANDOFF	65
2.	1	CW00874	WELDMENT, 3' STANDOFF	65
3.	1	CW00873	WELDMENT, T-BOOM PIVOT	28
4.	2	CS01565	PLATE, T-BOOM CONNECTION	17
5.	2	CS02233	PLATE, SPACER	2
6.	2	C40026076	BOLT ASSEMBLY, 1ø X 3 3/4 A325	4
7.	4	C40026024	BOLT ASSEMBLY, 5/8ø X 2 1/4 A325	2
			TOTAL WEIGHT	183

CK00090 KIT LIST OF MATERIAL (ULTRA-BOOM)

ITEM	QTY.	PART NO.	DESCRIPTION	WEIGHT
8.	2	CS01998	PLATE, MOUNTING BRACKET	6
9.	2	CS01361	PLATE, 2 HOLE ADAPTER CLAMP	5
10.	2	CS02234	ANGLE, FACE (FORMED)	6
11.	2	CS02235	ANGLE, FACE (FORMED)	6
12.	1	CS02236	FLAT, TIEBACK	1
13.	1	CS02237	PIPE, SPACER	1
14.	1	CS01909	PLATE, TIEBACK SUPPORT	4
15.	8	C40204100	CROSSOVER CLAMP, 1.9"ø TO 2 3/8"ø	32
16.	2	C40034081	U-BOLT ASSEMBLY, 1/2ø X 2 9/16 C-C	3
17.	8	C40034060	U-BOLT ASSEMBLY, 1/2ø X 2 9/16 C-C	6
18.	1	C40034063	U-BOLT ASSEMBLY, 1/2ø X 1 13/16 C-C	1
19.	4	C40140001	BOLT ASSEMBLY, 3/4 X 10 A307 W/NUT, LKW, FLW	1
20.	1	C40026029	BOLT ASSEMBLY, 5/8 X 3 1/2 A325	1
21.	4	C40026023	BOLT ASSEMBLY, 5/8 X 2 A325	2
			TOTAL WEIGHT	75

LIST OF MISCELLANEOUS MATERIAL

ITEM	QTY.	PART NO.	DESCRIPTION	WEIGHT
22.	1	CS01910	PIPE, TIEBACK	23
23.	2	CS02229	PIPE, 1.90"ø X 0.148 X 12'-6	72
			TOTAL WEIGHT	95

NOTES:

1. TRI-COLLAR BRACKET, DISH MOUNT ASSEMBLY, AND 2 3/8" O.D. MOUNTING PIPE MUST BE PURCHASED SEPARATELY.
   CROSSOVER CLAMPS FOR MOUNTING THE PIPES ARE INCLUDED ABOVE
2. QUANTITIES SHOWN IN LISTS OF MATERIAL ARE FOR ONE (1) ULTRA-BOOM ONLY.

UNLESS OTHERWISE SPECIFIED ALL DIMENSIONS INCLUDE FINISHES AND ARE IN INCHES
TOLERANCES: FRACTIONS ± 1/16" ANGLES ± 1/2 DEG. DECIMALS ± .010"

MATERIAL: TOLERANCES DO NOT APPLY TO RAW MATERIAL

REV	DATE	DRW	CHK	DESCRIPTION

Sabre Industries™ Towers and Poles

CONFIDENTIAL
This document and the information contained herein is the confidential trade secret property of Sabre Communications Corporation ("Sabre") and must not be reproduced, copied or used, in whole or in part, for any purpose without the prior written consent of Sabre.
© 2014 Sabre Communications Corporation. All rights reserved.

12' ULTRA-BOOM W/TIEBACK
(3' STANDOFF FOR MONOPOLE)
ANTENNA MOUNTING HARDWARE
W/NO ANTENNA MOUNTING PIPES

		SIZE	DRAWING NO.	REV
DATE	7/13/11	B	C10852564	0
DRAWN BY	MLC		SCALE	PAGE
CHECKED BY	MC		None	1 OF 2

L. D. STROBEL CO. INC.
DESIGN / CONSTRUCTION
WIRELESS COMMUNICATIONS
1022 SHARY CIRCLE, SUITE 9, CONCORD, CA. 94518
PHONE: 925-686-3241 FAX: 925-686-3350

REGISTERED PROFESSIONAL ENGINEER CONRAD L. ALPARGER NO C 28699 EXPIRE 3-31-17 CIVIL STATE OF CALIFORNIA

REVISIONS

NO.	DATE	DESCRIPTION
1	6/8/15	PRELIMINARY
2	6/10/15	90% ZD
2	6/22/15	95% ZD

SUNNYVALE FIRE STATION 5
160' MONOPOLE
1210 BORDEAUX DRIVE
SUNNYVALE, CA 94089

DRAWN: MRB DATE: 6/19/15
FILE: 6638-A7
SHEET NO.
A-7

MADE IN U.S.A.

12' ULTRA BOOM CUT-SHEETS
SCALE: NONE

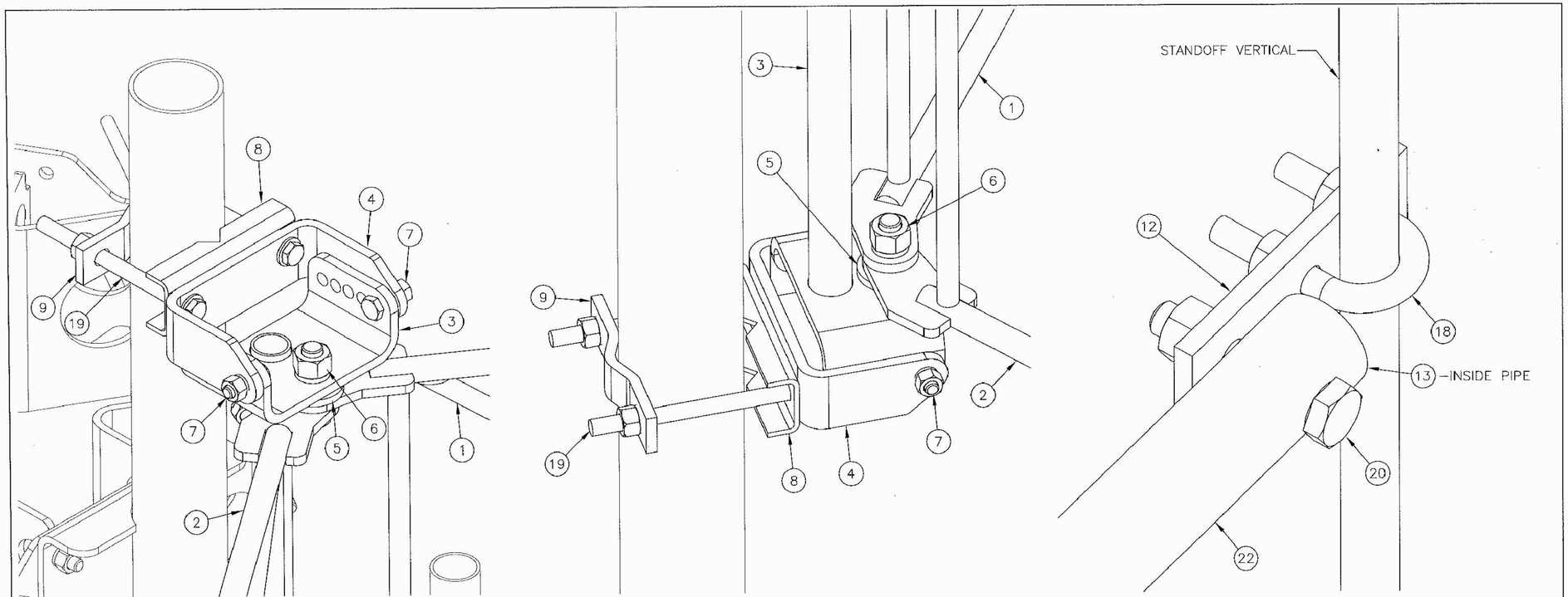

UNLESS OTHERWISE SPECIFIED ALL DIMENSIONS INCLUDE FINISHES AND ARE IN INCHES TOLERANCES: FRACTIONS ± 1/16" ANGLES ± 1/2 DEG. DECIMALS ± .010"	MATERIAL: TOLERANCES DO NOT APPLY TO RAW MATERIAL	Sabre Industries™ Towers and Poles	12' ULTRA-BOOM W/TIEBACK (3' STANDOFF FOR MONOPOLE) ANTENNA MOUNTING HARDWARE W/NO ANTENNA MOUNTING PIPES			
REV / DATE / DRW / CHK / DESCRIPTION		CONFIDENTIAL This document and the information contained herein is the confidential trade secret property of Sabre Communications Corporation ("Sabre") and must not be reproduced, copied or used, in whole or in part, for any purpose without the prior written consent of Sabre. © 2014 Sabre Communications Corporation. All rights reserved.	DATE 7/13/11	SIZE B	DRAWING NO. C10852564	REV 0
			DRAWN BY MLC			
			CHECKED BY MC		SCALE None	PAGE 2 OF 2

12' ULTRA BOOM CUT-SHEETS
SCALE: NONE

L. D. STROBEL CO. INC.
DESIGN / CONSTRUCTION
WIRELESS COMMUNICATIONS
1022 SHARY CIRCLE, SUITE 9, CONCORD, CA. 94518
PHONE: 925-686-3241 FAX: 925-686-3350

REGISTERED PROFESSIONAL ENGINEER CONRAD L. ALEPARDO NO C 28699 EXPIRE 3-31-17 CIVIL STATE OF CALIFORNIA

REVISIONS

NO.	DATE	DESCRIPTION
1	6/8/15	PRELIMINARY
2	6/10/15	90% ZD
2	6/22/15	95% ZD

SUNNYVALE FIRE STATION 5
160' MONOPOLE
1210 BORDEAUX DRIVE
SUNNYVALE, CA 94089

DRAWN: MRB DATE: 6/19/15
FILE: 6638-A7.1
SHEET NO.
A-7.1

MADE IN U.S.A.

LIST OF MATERIAL				
ITEM	QTY.	PART NO.	DESCRIPTION	WEIGHT
1.	1	CW00521	WELDMENT, PIPE MOUNT	80
2.	4	C40026023	BOLT ASSEMBLY, 5/8 ø X 2 A325	2
			TOTAL WEIGHT	82

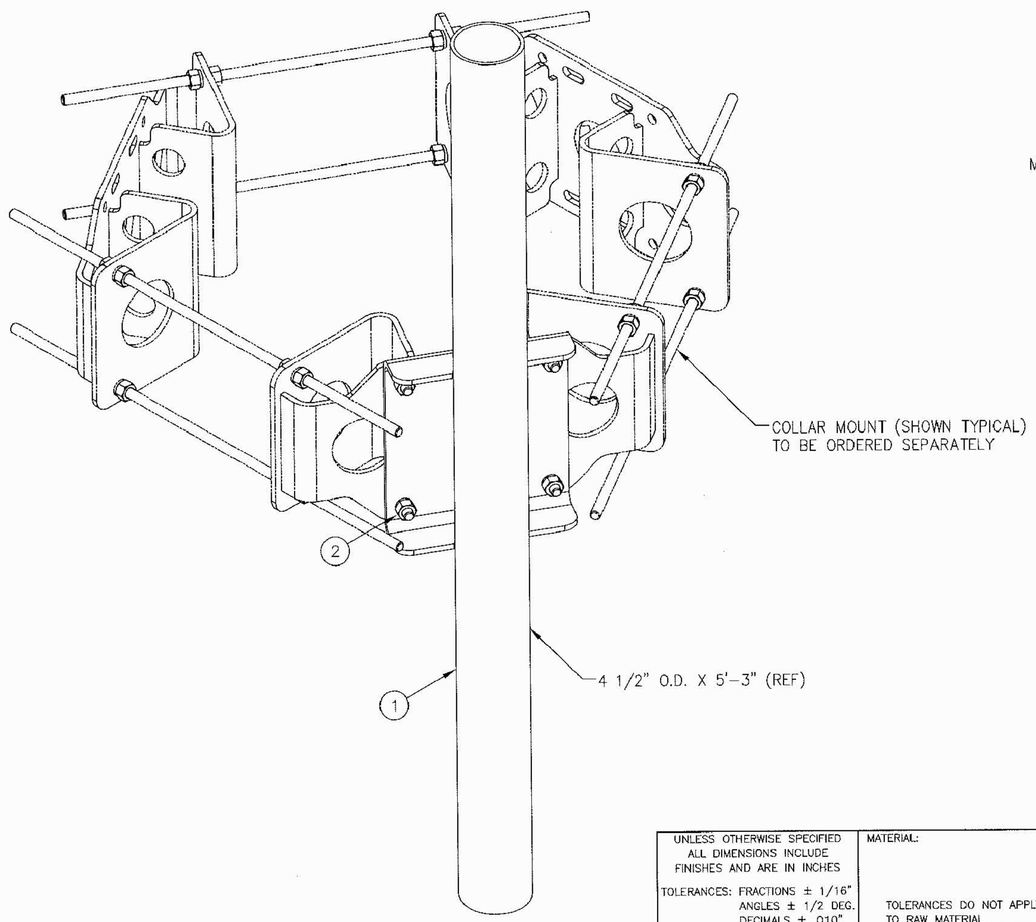

ISOMETRIC VIEW

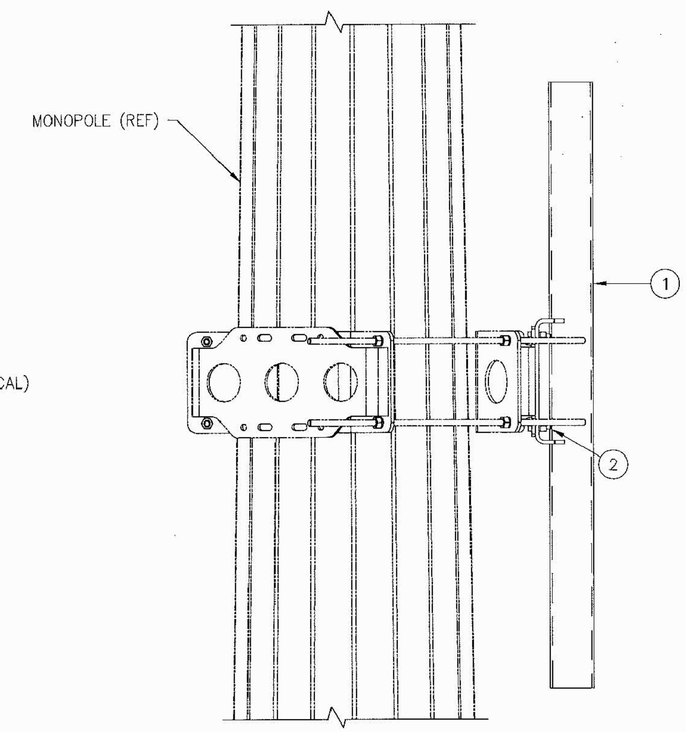

SIDE VIEW

UNLESS OTHERWISE SPECIFIED
ALL DIMENSIONS INCLUDE
FINISHES AND ARE IN INCHES

TOLERANCES: FRACTIONS ± 1/16"
ANGLES ± 1/2 DEG.
DECIMALS ± .010"

MATERIAL:

TOLERANCES DO NOT APPLY
TO RAW MATERIAL

REV	DATE	DRW	CHK	DESCRIPTION

Sabre Industries™
Towers and Poles

CONFIDENTIAL
This document and the information contained herein is the confidential trade secret property of Sabre Communications Corporation ("Sabre") and must not be reproduced, copied or used, in whole or in part, for any purpose without the prior written consent of Sabre.
©2014 Sabre Communications Corporation. All rights reserved.

MONOPOLE DISH MOUNT ASSEMBLY

		SIZE	DRAWING NO.	REV
DATE	07/29/10	B	C10899001	0
DRAWN BY	WRF			
CHECKED BY	DLW		SCALE None	PAGE 1 OF 1

L. D. STROBEL CO. INC.
DESIGN / CONSTRUCTION
WIRELESS COMMUNICATIONS
1022 SHARY CIRCLE, SUITE 9, CONCORD, CA. 94518
PHONE: 925-686-3241 FAX: 925-686-3350

REGISTERED PROFESSIONAL ENGINEER
CONRAD L. ALFARO
NO C 28699
EXPIRE 3-31-17
CIVIL
STATE OF CALIFORNIA

REVISIONS

NO.	DATE	DESCRIPTION
1	6/8/15	PRELIMINARY
2	6/10/15	90% ZD
2	6/22/15	95% ZD

SUNNYVALE FIRE STATION 5
160' MONOPOLE
1210 BORDEAUX DRIVE
SUNNYVALE, CA 94089

DRAWN: MRB DATE: 6/22/15
FILE: 6638-A8
SHEET NO.

A-8

MADE IN U.S.A.

MONOPOLE DISH MOUNT ASSY CUT-SHEET
SCALE: NONE

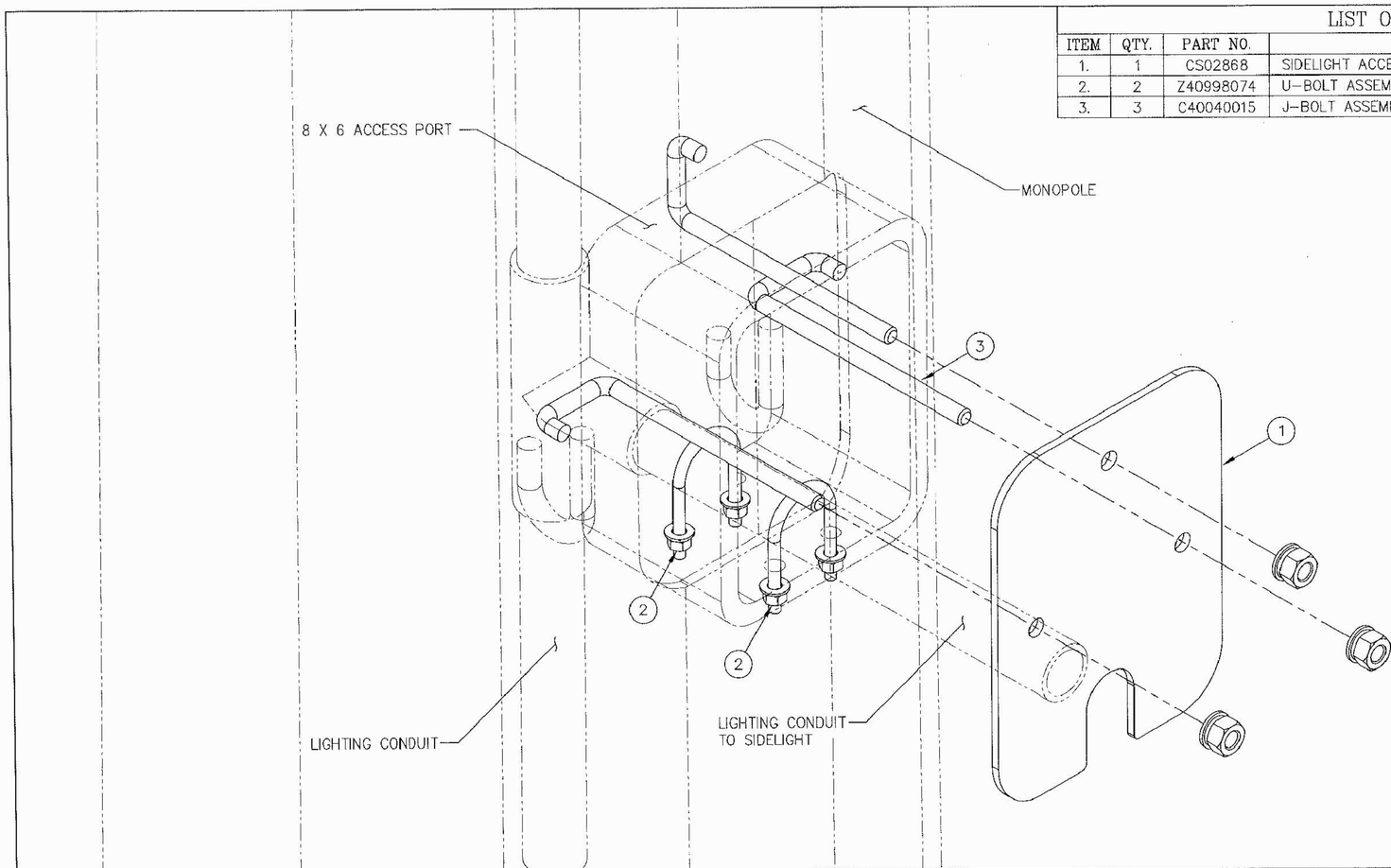

LIST OF MATERIAL

ITEM	QTY.	PART NO.	DESCRIPTION	WEIGHT
1.	1	CS02868	SIDELIGHT ACCESS PORT COVER PLATE	3
2.	2	Z40998074	U-BOLT ASSEMBLY, 1/4 ø X 1 5/8 C/C	1
3.	3	C40040015	J-BOLT ASSEMBLY, 3/8 ø X 6 1/8 I.L.	1
			TOTAL WEIGHT	5

UNLESS OTHERWISE SPECIFIED
ALL DIMENSIONS INCLUDE
FINISHES AND ARE IN INCHES

TOLERANCES: FRACTIONS ± 1/16"
ANGLES ± 1/2 DEG.
DECIMALS ± .010"

MATERIAL:

TOLERANCES DO NOT APPLY
TO RAW MATERIAL

REV	DATE	DRW	CHK	DESCRIPTION

Sabre Industries™
Towers and Poles

CONFIDENTIAL
This document and the information contained herein is the confidential trade secret property of Sabre Communications Corporation ("Sabre") and must not be reproduced, copied or used, in whole or in part, for any purpose without the prior written consent of Sabre.
© 2014 Sabre Communications Corporation. All rights reserved.

SIDELIGHT INSTALLATION DETAIL
FOR MONOPOLES
(FOR 3/4" AND 1" CONDUITS)

		SIZE	DRAWING NO.	REV
DATE	06/08/12	B	C30002002	0
DRAWN BY	WRF		SCALE	PAGE
CHECKED BY	KLE		None	1 OF 1

L. D. STROBEL CO. INC.
DESIGN / CONSTRUCTION
WIRELESS COMMUNICATIONS
1022 SHARY CIRCLE, SUITE 9, CONCORD, CA. 94518
PHONE: 925-686-3241 FAX: 925-686-3350

REGISTERED PROFESSIONAL ENGINEER
CONRAD L. ALPARGE
NO C 28699
EXPIRE 3-31-17
CIVIL
STATE OF CALIFORNIA

REVISIONS

NO.	DATE	DESCRIPTION
1	6/8/15	PRELIMINARY
2	6/10/15	90% ZD
2	6/22/15	95% ZD

SUNNYVALE FIRE STATION 5
160' MONOPOLE
1210 BORDEAUX DRIVE
SUNNYVALE, CA 94089

DRAWN: MRB DATE: 6/22/15
FILE: 6638-A8.1
SHEET NO.

A-8.1

MADE IN U.S.A.

SIDELIGHT INSTALLATION DETAIL CUT-SHEET
SCALE: NONE

NOTES:
1. QUANTITIES SHOWN IN LIST OF MATERIAL ARE FOR ONE (1) T-ARM WORK PLATFORM ONLY.
2. TRI-COLLAR MOUNTS ARE SHOWN TYPICAL AND MUST BE PURCHASED SEPARATELY.
3. T-ARM MOUNTS MUST BE PURCHASED SEPARATELY.

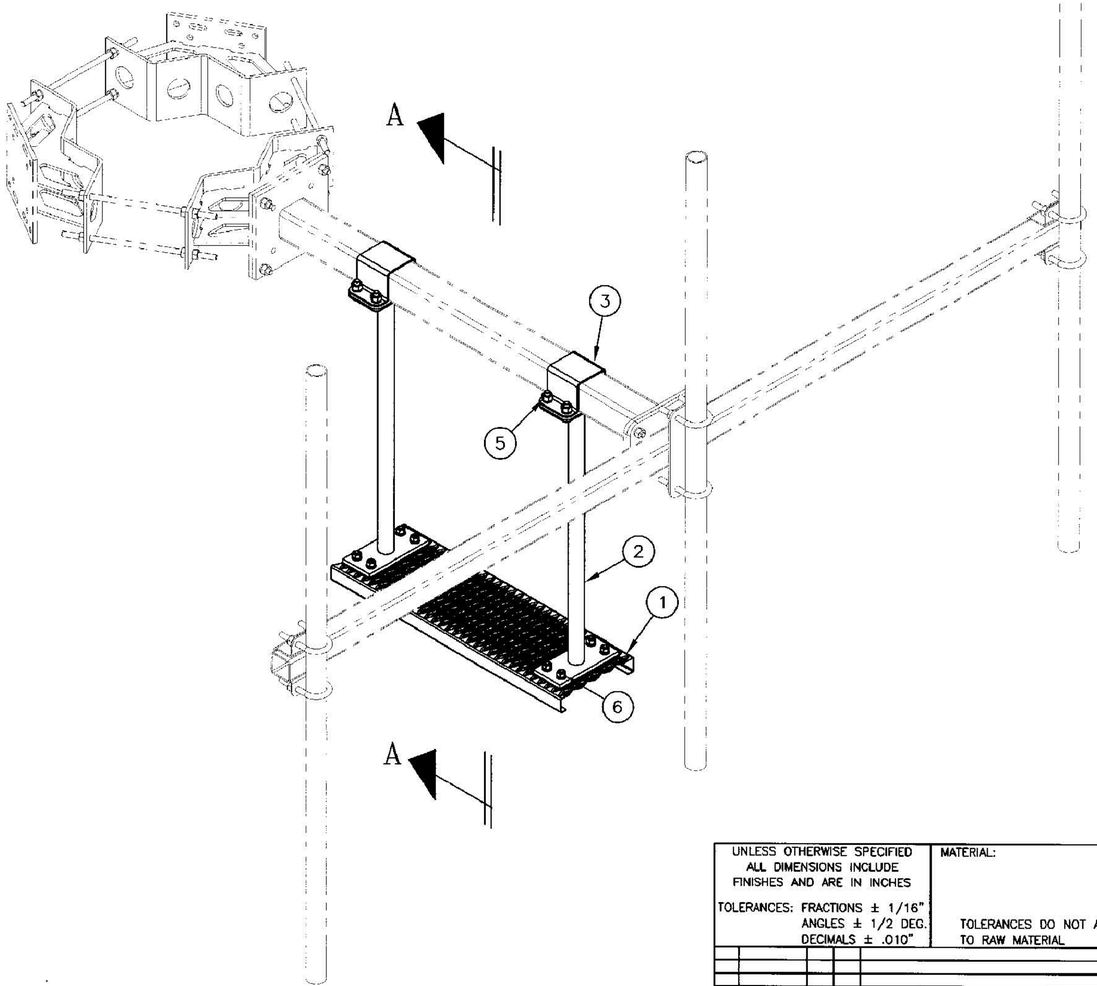

ISOMETRIC VIEW

C10181013 (1) T-ARM WORK PLATFORM ASSEMBLY

(1)		GRATING	13#
(2)	CK00098	HARDWARE KIT	60#
		TOTAL WEIGHT	73#

LIST OF MATERIAL

ITEM	QTY.	PART NO.	DESCRIPTION	WEIGHT
1.	1	C20137040	GRIP STRUT GRATING (11 3/4" X 3'-0")	13#
			TOTAL WEIGHT	13#

CK00098 KIT LIST OF MATERIAL

ITEM	QTY.	PART NO.	DESCRIPTION	WEIGHT
2.	1	CW00680	WELDMENT, T-ARM WORK PLATFORM SUPPORT	17#
3.	1	CS01810	PIPE MOUNT, SQUARE TUBE	4#
4.	1	CS00946	PLATE, BACKUP	5#
5.	4	C40026023	BOLT ASSEMBLY, 5/8 X 2 A325	2#
6.	4	C40026008	BOLT ASSEMBLY, 1/2 X 2 3/4 A325	2#
			TOTAL WEIGHT	30#

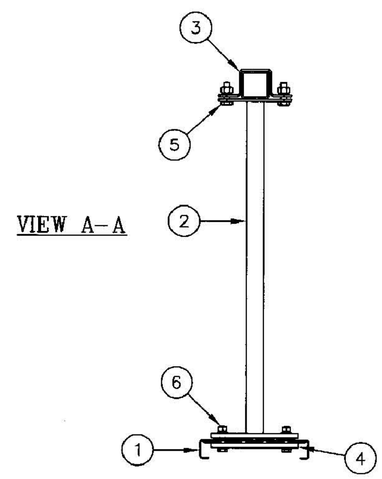

VIEW A-A

UNLESS OTHERWISE SPECIFIED ALL DIMENSIONS INCLUDE FINISHES AND ARE IN INCHES

TOLERANCES: FRACTIONS ± 1/16" ANGLES ± 1/2 DEG. DECIMALS ± .010"

MATERIAL: TOLERANCES DO NOT APPLY TO RAW MATERIAL

REV	DATE	DRW	CHK	DESCRIPTION
1	3/31/09	MLC	MC	REDRAWN IN AUTOCAD

Sabre Towers & Poles

CONFIDENTIAL
This document and the information contained herein is the confidential trade secret property of Sabre Communications Corporation ("Sabre") and must not be reproduced, copied or used, in whole or in part, for any purpose without the prior written consent of Sabre.
© 2009 Sabre Communications Corporation. All rights reserved.

T-ARM WORK PLATFORM ASSEMBLY
(FITS 4" SQUARE TUBE)

		SIZE	DRAWING NO.	REV
DATE	10/1/2008	B	C10181013	1
DRAWN BY	JV		SCALE None	PAGE 1 OF 1
CHECKED BY				

T-ARM WORK PLATFORM CUT-SHEETS
SCALE: NONE

L. D. STROBEL CO. INC.
DESIGN / CONSTRUCTION
WIRELESS COMMUNICATIONS
1022 SHARY CIRCLE, SUITE 9, CONCORD, CA. 94518
PHONE: 925-686-3241 FAX: 925-686-3350

REGISTERED PROFESSIONAL ENGINEER CONRAD L. ALEPARDO NO C 28699 EXPIRE 3-31-17 CIVIL STATE OF CALIFORNIA

REVISIONS

NO.	DATE	DESCRIPTION
1	6/8/15	PRELIMINARY
2	6/10/15	90% ZD
2	6/22/15	95% ZD

SUNNYVALE FIRE STATION 5
160' MONOPOLE
1210 BORDEAUX DRIVE
SUNNYVALE, CA 94089

DRAWN: MRB DATE: 6/19/15
FILE: 6638-A8.2
SHEET NO.
A-8.2

MADE IN U.S.A.

L. D. STROBEL CO. INC.
DESIGN / CONSTRUCTION
WIRELESS COMMUNICATIONS
1022 SHARY CIRCLE, SUITE 9, CONCORD, CA. 94518
PHONE: 925-686-3241 FAX: 925-686-3350

746-806 MHz

Amphenol ANTENNA SOLUTIONS

BCD-7509I-EDIN-X-25

V-Pol | Omni | 360° | 9.0 dBd | Designed for Enhanced IM Performance

Replace "X" with desired electrical downtilt.

Antenna is available with NE connector(s). Replace "EDIN" with "NE" in the model number when ordering.

Electrical Characteristics		
Frequency bands	746-806 MHz	
Polarization	Vertical	
Horizontal beamwidth	360°	
Vertical beamwidth	7°	
Gain	9.0 dBd (11.1 dBi)	
Electrical downtilt (X)	0, 3, 5	
Impedance	50Ω	
VSWR	≤ 1.43:1	
Null fill	25% (-12.04 dB)	
IM3 (2x20W carriers)	-145 dBc	
Input power	500 W	
Lightning protection	Direct Ground	
Connector(s)	1 / EDIN or NE / Female / Bottom	
Mechanical Characteristics		
Dimensions Length x Diameter	3416 x Ø110 mm	134.5 x Ø4.3 in
Radome length	2889 mm	113 in
Support pipe length	450 mm	17.7 in
Support pipe material	Aluminum alloy	
Weight without mounting brackets	15.0 kg	33.1 lbs
Wind area	0.35 m²	3.8 ft²
Survival wind speed	>201 km/hr	>125 mph

Mounting Options	Part Number	Fits Pipe Diameter	Weight
Standard Mounting Bracket Kit	36312000	50-160 mm (2.0-6.3 in)	8.2 kg (18 lbs)
Offset Mounting Bracket Kit	36413001	50-160 mm (2.0-6.3 in)	7.7 kg (17 lbs)
Downtilt Bracket Kit	Antenna cannot be mechanically downtilted		
Inverted Mounting	The BCD-7509I-EDIN-X-25 cannot be mounted in an inverted position		
Inverted Models	The inverted model is sold under a different part number: BCD-7509I-EDIN-X-25-Invert		

BCD-7509I-EDIN-X-25

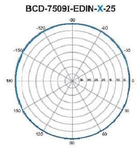

Horizontal

BCD-7509I-EDIN-0-25

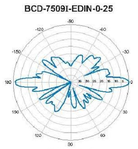

0° | Vertical

BCD-7509I-EDIN-3-25

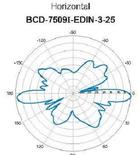

3° | Vertical

BCD-7509I-EDIN-5-25

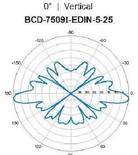

5° | Vertical

Quoted performance parameters are provided to offer typical or range values only and may vary as a result of normal manufacturing and operational conditions. Extreme operational conditions and/or stress on structural supports is beyond our control. Such conditions may result in damage to this product. Improvements to product may be made without notice.

CC807 Series

7/800 MHz Corporate Collinear Antennas

746 - 870 MHz

RFI

These industry leading PIM and PIP rated collinear arrays allow site operators to combine, with complete integrity, a large number of communications services into a single, low profile collinear antenna array.

The true corporate feed of these arrays maintains total pattern integrity over a very broad operating bandwidth, similar to that previously available only in exposed dipole configurations. This is now achieved in the preferred form factor of a fully enclosed fiberglass radome.

The corporate collinears employ a unique corporate phasing system enabling precision control of the element placements ensuring phase purity resulting in exceptional bandwidth and electrical performance . Gain is maximized and side lobes reduced dramatically.

In a patent pending design approach the individual dipole elements including matching network are fabricated entirely of a flexible circuit board. The dipole elements are soldered to a brass support tube which is directly connected to the mounting tube and the lightning spike at the top of the antenna.

The result of this unique, incredibly strong design is:

- Peak Instantaneous Power rating (PIP) 25 kW
- Passive Intermodulation rating (PIM) -150 dBc
- High continuous power rating
- Extraordinary bandwidth characteristics with superior pattern control
- Field invertible (most models)

CC807-08

International Patents Pending

RFI
9329 Ravena Rd.
Suite C
Twinsburg OH 44087 USA
Phone: 330 486 0706
Fax: 330 486 0705

DIGITAL READY -150dBc IP3 RATING

Copyright RF Industries Pty Ltd 2011. Subject to change without notice.

CC807 Series

7/800 MHz Corporate Collinear Antennas

746 - 870 MHz

RFI

Electrical Specifications				
Model Number	CC807-03	CC807-06	CC807-08	CC807-11
Nominal Gain *dBd*	2.8	6	8	10.5
Frequency *MHz*	746 - 870			
Tuned Bandwidth	Full			
VSWR (Return Loss)	1.5:1			
Nominal Impedance Ω	50			
Downtilt			0° Std - 5° *(1)*	0° Std - 5° *(1)*
Vertical Beamwidth	28	17	9	4.5
Horizontal Beamwidth °	360			
Input Power *W*	250	500		
Passive IM 3rd order (2x20W) *dBc*	-150			
Peak Instantaneous Power *(kW)*	25			

Mechanical Specifications					
Model Number		CC807-03	CC807-06	CC807-08	CC807-11
Construction		Composite fiberglass sky, blue radome, aluminum mounting tube			
Length *inches*		47.6	69	114	206
Weight *lbs*		8.8	16	26.5	49
Radome Diameter *inches*		3			
Shipping Weight *lbs*		17.6	25	40	67
Shipping Dimensions *inches*	*H*	5.5			
	W	5.5			
	L	56	75	119	221
Termination		7/16 DIN female			
Suggested Clamps (not included)		UC1142			
Invertible Mounting		Yes *(2)*			
Projected area *ft²*	no ice	0.87	1.36	2.49	4.9
	with ice	1.13	1.69	3.10	6.19
Lateral Thrust @ 100mph *lbs*		21.6	33.7	62	121.4
Wind Gust Rating *mph*		150			
Torque @ 160km/h *ft.lbs*		15	54	205	761

CC807-06 - E Plane

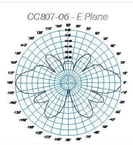

Typical VSWR Response (CC807-06)

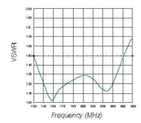

DIGITAL READY -150dBc IP3 RATING

Note (1) Pre-set downtilt variations of 5 degrees are available in the following models CC807-08, CC807-11. Simply add -T5 at the end of the model being ordered. E.g. CC807-08-T5, CC807-11-T5.
(2) Downtilt versions can not be field inverted.

RFI
9329 Ravena Rd.
Suite C
Twinsburg OH 44087 USA
Phone: 330 486 0706
Fax: 330 486 0705

Copyright RF Industries Pty Ltd 2011. Subject to change without notice.

REGISTERED PROFESSIONAL ENGINEER
CONRAD L. ALEXANDER
NO C 28699
EXPIRE 3-31-17
CIVIL
STATE OF CALIFORNIA

REVISIONS

NO.	DATE	DESCRIPTION
1	6/8/15	PRELIMINARY
2	6/10/15	90% ZD
2	6/22/15	95% ZD

SUNNYVALE FIRE STATION 5
160' MONOPOLE
1210 BORDEAUX DRIVE
SUNNYVALE, CA 94089

DRAWN: MRB | DATE: 6/8/15
FILE: 6638-A9
SHEET NO.
A-9

MADE IN U.S.A.

ANTENNA CUT-SHEETS
SCALE: NONE

Bird® Dual Diversity Tower Top Amplifier and Multicoupler Control Unit (MCU)

432-83H-01-T, 432-83H-01-M (Motorola # DS43283H01T, # DS43283H01M)

Bird Technologies Group, TX RX Systems brand, Dual Diversity Tower-Top Amplifier (TTA) system is a high performance, two channel quadrature-coupled Low Noise Amplifier (LNA) designed to increase the performance of a Base Transceiver Station (BTS) while ensuring reliable communications for critical Public Safety applications. This increase in sensitivity can make up for the imbalance between mobile and handheld users in critical systems and improve marginal in-building penetration. The signal paths of the two channels are carefully matched to maximize the aperture gain of a dual diversity radio system.

The TTA consists of two components: the Tower-Top Amplifier mounted close to the antenna and the receiver Multicoupler Control Unit. The MCU is designed to interface directly to 16 individual receivers operating in dual diversity mode or single mode. Each of the LNA's within the TTA are of quadrature design with separate bias circuits for maximum redundancy and superior intermodulation (IM) performance. LNA current monitoring of each amplifier is performed in the Control Unit to assess the health of the TTA system. Relay dry contact closure alarms are generated in the rare occurrence of a fault. An auxiliary "test" transmission line is used to help measure receiver sensitivity or diagnose damage or degradation of the primary transmission line.

PROBLEM	SOLUTION
Your tower is high and feed-line loss is degrading noise figure.	TTA establishes superior noise figure prior to feed-line loss.
New Diversity Radio systems have critical requirements.	The Dual Diversity TTA conforms to all Motorola requirements for a P25 diversity radio system.

FEATURES

Two channels of Redundant, quadrature LNA's ensures reliable communications.

PolyPhaser™ impulse suppressors provide protection from lightning damage on all I/O ports.

RF test port enables gain, sensitivity and degradation measurements from ground level.

Form-C contacts for fault reporting through a supervisory system.

Dual 16 port output with expansion capability.

L. D. STROBEL CO. INC.
DESIGN / CONSTRUCTION
WIRELESS COMMUNICATIONS
1022 SHARY CIRCLE, SUITE 9, CONCORD, CA. 94518
PHONE: 925-686-3241 FAX: 925-686-3350

REGISTERED PROFESSIONAL ENGINEER
CONRAD L. ALPARGER
NO C 28699
EXPIRE 3-31-17
CIVIL
STATE OF CALIFORNIA

REVISIONS

NO.	DATE	DESCRIPTION
1	6/8/15	PRELIMINARY
2	6/10/15	90% ZD
2	6/22/15	95% ZD

SUNNYVALE FIRE STATION 5
160' MONOPOLE
1210 BORDEAUX DRIVE
SUNNYVALE, CA 94089

DRAWN: MRB DATE: 6/22/15
FILE: 6638-A9.1
SHEET NO.
A-9.1

MADE IN U.S.A.

TOWER TOP AMPLIFIER CUT-SHEETS
SCALE: NONE

Bird® Dual Diversity Tower Top Amplifier and Multicoupler Control Unit (MCU)

432-83H-01-T, 432-83H-01-M
(Motorola # DS43283H01T, # DS43283H01M)

Specifications, System Combined

Bandwidth	792 – 824 MHz
System Noise Figure	1.8 dB / 2 dB
System IIP3	+15 dBm min
System Net Gain	> 15 dB Min
TTA Net Gain	Fully settable by electronic attenuator
Filter Rejection	110 dB min, 776 and 851 MHz

Part Number, Product

Dual Diversity Tower unit alone	432-83H-01-T
Multicoupler Control Unit, Dual 16 port output	
90-240VAC Power	432-83H-01-M
-48V Option	432-83H-01-M-48

Specifications, Tower Top Amplifier

Frequency Range	792-824 MHz
Net Gain	30 dB Min (Each Channel)
Noise Figure (Typ./Max)	1.8 dB / 2 dB
IIP3:	>15 dBm
Integrated Test Port Coupling	33 dB (Typ.)
Antenna Port VSWR	1.67 :1 Max
Power Requirements	12 VDC @ 1.4
Lightning Protection	Impulse Suppression on all external connectors
Lightning Arrester on main Transmission Lines (DC Voltage Pass Through) (Customer Supplied)	Motorola Part Number DS1090501WA (Male/Female) Motorola Part Number DS1090501WB (Female/Female)
Lightning Arrester on Test Port Line (DC Voltage Pass Through) (Customer Supplied)	Motorola Part Number DS1090501WA (Male/Female) Motorola Part Number DS1090501WB (Female/Female)
Lightning Arrester on TX Line (Customer Supplied)	Motorola Part Number DSTSXDFMBF (Female/Male) Motorola Part Number DSTSXDFFBF (Female/Female)
Operating Temp Range	-30°C to +60°C
Enclosure Modified NEMA 4X	Water resistant Polyester Housing
Connectors	N-Female
Dimensions (HWD)	14"x12"x7"
Weight	Approx 25 lbs

Specifications, Preselector

Passband Insertion Loss	<0.8 dB
Passband Return Loss	>15 dB
Stopband Rejection	>60 dB @ 776 and 851 MHz

Bird® Dual Diversity Tower Top Amplifier and Multicoupler Control Unit (MCU)

432-83H-01-T, 432-83H-01-M
(Motorola # DS43283H01T, # DS43283H01M)

Specifications, Preselector Filter

Frequency Range	792-824 MHz
Insertion Loss	< 3.0 dB
Return Loss	>12 dB
Stopband Rejection	>50 dB @ 776 and 851 MHz

Optional Products

Motorola best practices recommends the use of optional filters with narrower windows in order to achieve better selectivity for the system and provide more protection to the receivers against interference. Please specify sub-band frequency when ordering.

89-83F-02D-03	792-806 MHz, 3 MHz Bandwidth Preselector
89-83F-02D-06	792-806 MHz, 6 MHz Bandwidth Preselector
89-83F-02D-09	792-806 MHz, 9 MHz Bandwidth Preselector
89-83F-02D-014	792-806 MHz, 14 MHz Bandwidth Preselector
89-86A-02D-03	806-824 MHz, 3 MHz Bandwidth Preselector
89-86A-02D-05	806-824 MHz, 5 MHz Bandwidth Preselector
89-86A-02D-10	806-824 MHz, 10 MHz Bandwidth Preselector
89-86A-02D-15	806-824 MHz, 15 MHz Bandwidth Preselector
89-86a-02D-18	806-824 MHz, 18 MHz Bandwidth Preselector

Specifications, Dual 16-Port Receiver Multicoupler

Insertion Loss	< 3.0 dB
Stopband Rejection	50 dB Min @ 776 and 851 MHz
Multicoupler Net Gain	+0 dB typ., -2 dB min
RF Input Impedance	50 ohms
Input VSWR	< 2:1
A and B Channel Distribution Amps	Quadrature-Coupled Dual Stage

Optional Expansion Deck

Model Number	75-83H-432 16 to 32 port expansion kit

Reserve Gain Adjustment (Each Channel)

Coarse	0 – 15.5 dB in 0.5 dB steps
Fine	0-0.8 dB in < 0.1 dB steps (Fine adjustment accommodates accurate channel to channel amplitude balance)
Output IP3 (Before output Attenuator and 16-way split)	+48 dBm
16 BNC Female Outputs for each channel	Labeled RxA-1 through RxA-16 and RxB-1 through RxB-16
2 BNC Female	Outputs for splitting expansion

Connectors

N-Female RF Connections	TTA, A, B and Test Lines
BNC Female	input to Test Line (on front panel) outputs to BTS radios
Alarm Contacts	Two Form C Contacts. Separate alarms for A and B Channels
Power Requirements	48 VDC or 85-250 VAC 50/60 Hz, depending upon model
Operating Temperature	0°C to +50°C at non-condensing humidity
Enclosure Standard	EIA 19" Rack Mounting
Dimensions (HWD)	2 RU x 19" x 18"

You're heard, loud and clear.

30303 Aurora Rd. :: Solon, OH 44139 :: 866.695.4569 :: www.bird-technologies.com

MotoTowerTop-43286A01M-04262010

Bird® Technologies Group combines the industry leading brands of both Bird Electronic and TX RX Systems and is a global, innovative supplier of RF products, systems, services and educational solutions. Bird® Technologies Group reserved the right to modify specifications or discontinue any product without notice.

L. D. STROBEL CO. INC.
DESIGN / CONSTRUCTION
WIRELESS COMMUNICATIONS
1022 SHARY CIRCLE, SUITE 9, CONCORD, CA. 94518
PHONE: 925-686-3241 FAX: 925-686-3350

REGISTERED PROFESSIONAL ENGINEER CONRAD L. ALPARGER NO C 28699 EXPIRE 3-31-17 CIVIL STATE OF CALIFORNIA

REVISIONS

NO.	DATE	DESCRIPTION
1	6/8/15	PRELIMINARY
2	6/10/15	90% ZD
2	6/22/15	95% ZD

SUNNYVALE FIRE STATION 5
160' MONOPOLE
1210 BORDEAUX DRIVE
SUNNYVALE, CA 94089

DRAWN: MRB DATE: 6/22/15
FILE: 6638-A9.2
SHEET NO.
A-9.2

MADE IN U.S.A.

TOWER TOP AMPLIFIER CUT-SHEETS
SCALE: NONE

L. D. STROBEL CO. INC.
DESIGN / CONSTRUCTION
WIRELESS COMMUNICATIONS
1022 SHARY CIRCLE, SUITE 9, CONCORD, CA. 94518
PHONE: 925-686-3241 FAX: 925-686-3350

(/Membership/MyProfile.aspx) Login (/membership/default.aspx) Please select language Translate

COMMSCOPE® (/)

Search... Go

(/catalog/imagesCache/0000001/t006_r00838_v4.jpg)

(addtoproject.aspx?id=26347&company=andrew)VHLP800-11

800 mm | 2.6 ft ValuLine® High Performance Low Profile Antenna, single-polarized, 10.700–11.700 GHz

Product Brief (product_details.aspx?id=26347)

Specifications (product_details.aspx?id=26347&tab=1)

Documents/Tools (product_details.aspx?id=26347&tab=3)

General Specifications	
Antenna Type	VHLP - ValuLine® High Performance Low Profile Antenna, single-polarized
Diameter, nominal	800 mm | 2.6 ft
Polarization	Single

Electrical Specifications	
Beamwidth, Horizontal	2.2 °

Beamwidth, Vertical	2.2 °
Cross Polarization Discrimination (XPD)	30 dB
Electrical Compliance	Brazil Anatel Class 2 | ETSI 302 217 Class 2 | US FCC Part 101A @ 10.7–11.7 GHz
Front-to-Back Ratio	59 dB
Gain, Low Band	36.9 dBi
Gain, Mid Band	37.4 dBi
Gain, Top Band	38.3 dBi
Operating Frequency Band	10.700 – 11.700 GHz
Radiation Pattern Envelope Reference (RPE)	7091D
Return Loss	17.7 dB
VSWR	1.30

Mechanical Specifications	
Fine Azimuth Adjustment	±10°
Fine Elevation Adjustment	±25°
Mounting Pipe Diameter	50 mm–115 mm | 2.0 in–4.5 in
Net Weight	22 kg | 49 lb
Side Struts, Included	0
Side Struts, Optional	0
Wind Velocity Operational	200 km/h | 124 mph

Wind Velocity Survival Rating	250 km/h | 155 mph

Wind Forces At Wind Velocity Survival Rating	
Axial Force (FA)	1500 N | 337 lbf
Side Force (FS)	743 N | 167 lbf
Twisting Moment (MT)	673 N•m
Weight with 1/2 in (12 mm) Radial Ice	35 kg | 77 lb
Zcg with 1/2 in (12 mm) Radial Ice	305 mm | 12 in
Zcg without Ice	178 mm | 7 in

Wind Forces At Wind Velocity Survival Rating Image

Click on image below to enlarge.

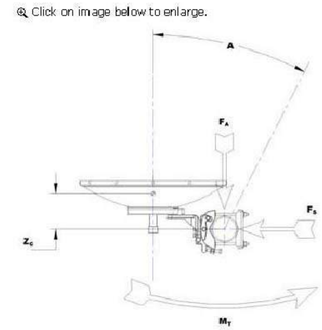

(/catalog/imagesCache/0000001/t006_r00832_v-1.jpg)

REGISTERED PROFESSIONAL ENGINEER CONRAD L. ALPARGER NO C 28699 EXPIRE 3-31-17 CIVIL STATE OF CALIFORNIA

REVISIONS

NO.	DATE	DESCRIPTION
1	6/8/15	PRELIMINARY
2	6/10/15	90% ZD
2	6/22/15	95% ZD

SUNNYVALE FIRE STATION 5
160' MONOPOLE
1210 BORDEAUX DRIVE
SUNNYVALE, CA 94089

DRAWN: MRB DATE: 6/9/15
FILE: 6638-A10
SHEET NO.
A-10

MADE IN U.S.A.

MW DISH CUT-SHEETS
SCALE: NONE

Antenna Dimensions And Mounting Information

Click on image below to enlarge.

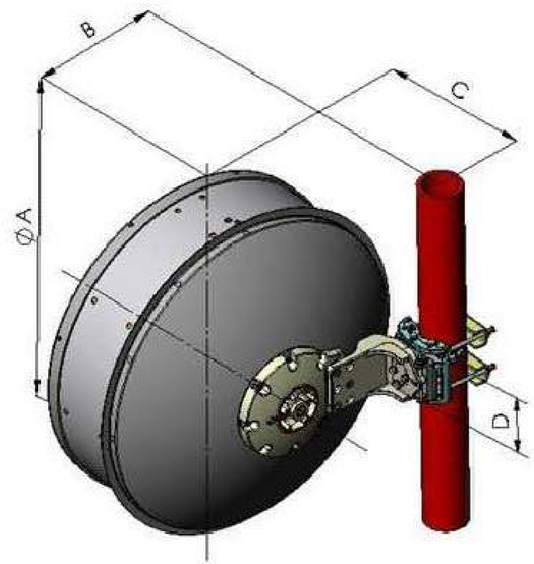

Dimensions in Inches (mm)				
Antenna Size, ft (m)	A	B	C	D
2.5	33.6 (853.9)	16.5 (418.0)	19.0 (483.3)	5.9 (150)

(/catalog/imagesCache/0000001/t006_r05415_v-1.jpg)

Antenna Part Numbers Available to Order

Create Custom PDF A custom pdf includes the part above and any parts you select below. Click View Parts to expand each product category and check the Select box for each part you want to include.

MW DISH CUT-SHEETS
SCALE: NONE

L. D. STROBEL CO. INC.
DESIGN / CONSTRUCTION
WIRELESS COMMUNICATIONS
1022 SHARY CIRCLE, SUITE 9, CONCORD, CA. 94518
PHONE: 925-686-3241 FAX: 925-686-3350

REGISTERED PROFESSIONAL ENGINEER
CONRAD L. ALPARGE
NO C 28699
EXPIRE 3-31-17
CIVIL
STATE OF CALIFORNIA

REVISIONS

NO.	DATE	DESCRIPTION
1	6/8/15	PRELIMINARY
2	6/10/15	90% ZD
2	6/22/15	95% ZD

SUNNYVALE FIRE STATION 5
160' MONOPOLE
1210 BORDEAUX DRIVE
SUNNYVALE, CA 94089

DRAWN: MRB DATE: 6/19/15
FILE: 6638-A10.1
SHEET NO.
A-10.1

MADE IN U.S.A.

3 Technical Data

This section contains the physical characteristics, environmental data, and the power supply of the RRUS A2.

3.1 Dimensions

Table 1 lists the technical data for the RRUS A2.

Table 1 RRUS A2 Technical Data

Description	Value
Number of carriers	One to four carriers. (subjects to license handling)
Frequency[1]	1,850 to 1,910 MHz uplink 1,930 to 1,990 MHz downlink B2 for LTE
	1,710 to 1,755 MHz uplink 2,110 to 2,155 MHz downlink B4 for LTE
	2,500 to 2,570 MHz uplink 2,620 to 2,690 MHz downlink B7 for LTE
	1,850 to 1,915 MHz uplink 1,930 to 1,995 MHz downlink B25 for LTE
Dimensions with Solar Shield and Handle and Feet	
Height	417 mm
Width	384 mm
Depth	85 mm
Dimensions without Solar Shield and without Handle or Feet	
Height	320 mm
Width	374 mm
Depth	80 mm
Weight	
RRUS A2	10 kg

Description	Value
Color	
Gray	

(1) Information about Instantaneous Bandwidth (IBW) can be found in RBS Configurations.

The RRUS A2 size, height, width, and depth with solar shield, is shown in Figure 2.

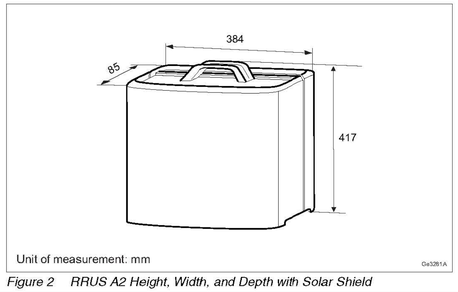

Figure 2 RRUS A2 Height, Width, and Depth with Solar Shield

3.1.2 RRUS 12 Dimensions

Table 2 lists the technical data for the RRUS 12.

Table 2 RRUS 12 Technical Data

Description	Value
Maximum nominal output power	2x10 W, 2x20 W, 2x30 W, 2x40 W, 2x50 W, and 2x60 W (subject to license handling)

Description	Value
Number of carriers	WCDMA and LTE: One to four carriers. GSM: One to eight carriers. CDMA: One to eight carriers. (subject to license handling)
Frequency[1]	1,920 to 1,980 MHz uplink 2,110 to 2,170 MHz downlink B1 for WCDMA and LTE
	1,850 to 1,910 MHz uplink 1,930 to 1,990 MHz downlink B2 for GSM, WCDMA, and LTE
	1,710 to 1,785 MHz uplink 1,805 to 1,880 MHz downlink B3 for GSM, WCDMA, and LTE
	880 to 915 MHz uplink 925 to 960 MHz downlink B8 for GSM and WCDMA
Dimensions with Solar Shield and Handle and Feet	
Height	518 mm
Width	470 mm
Depth	190 mm
Dimensions without Solar Shield and without Handle or Feet	
Height	418 mm
Width	458 mm
Depth	159 mm
Weight	
RRUS 12 B1 and RRUS B2	22.4 kg
RRUS 12 B3 and RRUS 12 B8	26.3 kg
Color	
Gray	

(1) Information about IBW can be found in RBS Configurations.

The RRUS 12 size, height, width, and depth with solar shield, is shown in Figure 3.

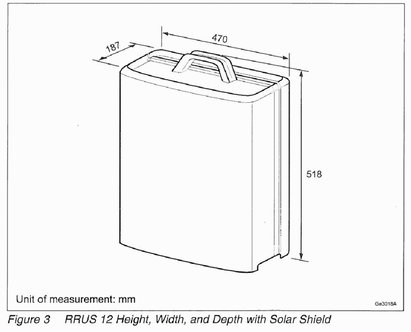

Figure 3 RRUS 12 Height, Width, and Depth with Solar Shield

Product Specifications

COMMSCOPE®

POWERED BY ANDREW.

SBNHH-1D65A

Andrew® Tri-band Antenna, 698–896 and 2x 1695–2360 MHz, 65° horizontal beamwidth, internal RET. Both high bands share the same electrical tilt.

- Interleaved dipole technology providing for attractive, low wind load mechanical package

Electrical Specifications

Frequency Band, MHz	698–806	806–896	1695–1880	1850–1990	1920–2180	2300–2360
Gain, dBi	13.6	13.7	16.5	16.9	17.1	17.6
Beamwidth, Horizontal, degrees	66	61	70	65	62	61
Beamwidth, Vertical, degrees	17.6	15.9	7.1	6.6	6.2	5.5
Beam Tilt, degrees	0–18	0–18	0–10	0–10	0–10	0–10
USLS, dB	16	13	13	13	12	12
Front-to-Back Ratio at 180°, dB	25	27	28	28	27	29
CPR at Boresight, dB	20	16	20	23	17	20
CPR at Sector, dB	10	5	11	6	1	4
Isolation, dB	25	25	25	25	25	25
Isolation, Intersystem, dB	30	30	30	30	30	30
VSWR | Return Loss, dB	1.5 | 14.0	1.5 | 14.0	1.5 | 14.0	1.5 | 14.0	1.5 | 14.0	1.5 | 14.0
PIM, 3rd Order, 2 x 20 W, dBc	-153	-153	-153	-153	-153	-153
Input Power per Port, maximum, watts	350	350	350	350	350	300
Polarization	±45°	±45°	±45°	±45°	±45°	±45°
Impedance	50 ohm	50 ohm	50 ohm	50 ohm	50 ohm	50 ohm

Electrical Specifications, BASTA*

Frequency Band, MHz	698–806	806–896	1695–1880	1850–1990	1920–2180	2300–2360
Gain by all Beam Tilts, average, dBi	13.1	13.1	16.1	16.5	16.7	17.2
Gain by all Beam Tilts Tolerance, dB	±0.5	±0.5	±0.5	±0.3	±0.5	±0.4
Gain by Beam Tilt, average, dBi	0 ° | 13.4 9 ° | 13.1 18 ° | 12.7	0 ° | 13.4 9 ° | 13.1 18 ° | 12.7	0 ° | 16.0 5 ° | 16.2 10 ° | 16.1	0 ° | 16.3 5 ° | 16.5 10 ° | 16.5	0 ° | 16.5 5 ° | 16.8 10 ° | 16.6	0 ° | 17.0 5 ° | 17.3 10 ° | 16.9
Beamwidth, Horizontal Tolerance, degrees	±3.1	±5.4	±2.8	±4	±6.6	±4.6
Beamwidth, Vertical Tolerance, degrees	±1.8	±1.4	±0.3	±0.4	±0.5	±0.3
USLS, dB	15	14	15	15	15	14
Front-to-Back Total Power at 180° ± 30°, dB	22	21	26	26	24	25
CPR at Boresight, dB	22	16	22	25	21	22
CPR at Sector, dB	10	6	12	8	5	4

* CommScope® supports NGMN recommendations on Base Station Antenna Standards (BASTA). To learn more about the benefits of BASTA, download the whitepaper Time to Raise the Bar on BSAs.

General Specifications

Antenna Brand	Andrew®
Antenna Type	DualPol® multiband with internal RET
Band	Multiband
Brand	DualPol® | Teletilt®
Operating Frequency Band	1695 – 2360 MHz | 698 – 896 MHz
Performance Note	Outdoor usage

©2015 CommScope, Inc. All rights reserved. All trademarks identified by ® or ™ are registered trademarks, respectively, of CommScope. All specifications are subject to change without notice. See www.commscope.com for the most current information. Revised: June 22, 2015

Product Specifications

COMMSCOPE®

SBNHH-1D65A

POWERED BY ANDREW.

Mechanical Specifications

Color	Light gray
Lightning Protection	dc Ground
Radiator Material	Aluminum | Low loss circuit board
Radome Material	Fiberglass, UV resistant
RF Connector Interface	7-16 DIN Female
RF Connector Location	Bottom
RF Connector Quantity, total	6
Wind Loading, maximum	445.0 N @ 150 km/h 100.0 lbf @ 150 km/h
Wind Speed, maximum	241.4 km/h | 150.0 mph

Dimensions

Depth	180.0 mm | 7.1 in
Length	1413.0 mm | 55.6 in
Width	301.0 mm | 11.9 in
Net Weight	15.2 kg | 33.5 lb

Remote Electrical Tilt (RET) Information

Input Voltage	10–30 Vdc
Power Consumption, idle state, maximum	2.0 W
Power Consumption, normal conditions, maximum	13.0 W
Protocol	3GPP/AISG 2.0 (Multi-RET)
RET Interface	8-pin DIN Female | 8-pin DIN Male
RET Interface, quantity	1 female | 1 male
RET System	Teletilt®

Regulatory Compliance/Certifications

Agency	Classification
RoHS 2011/65/EU	Compliant by Exemption
China RoHS SJ/T 11364-2006	Above Maximum Concentration Value (MCV)
ISO 9001:2008	Designed, manufactured and/or distributed under this quality management system

Included Products

BSAMNT-1 — Wide Profile Antenna Downtilt Mounting Kit for 2.4 - 4.5 in (60 - 115 mm) OD round members. Kit contains one scissor top bracket set and one bottom bracket set.

* Footnotes

Performance Note — Severe environmental conditions may degrade optimum performance

©2015 CommScope, Inc. All rights reserved. All trademarks identified by ® or ™ are registered trademarks, respectively, of CommScope. All specifications are subject to change without notice. See www.commscope.com for the most current information. Revised: June 22, 2015

RRUS+A2, RRUS12
ANTENNA
CUT SHEETS
SCALE: NONE

L. D. STROBEL CO. INC.
DESIGN / CONSTRUCTION
WIRELESS COMMUNICATIONS
1022 SHARY CIRCLE, SUITE 9, CONCORD, CA. 94518
PHONE: 925-686-3241 FAX: 925-686-3350

REGISTERED PROFESSIONAL ENGINEER
CONRAD L. ALFARO
NO C 28899
EXPIRE 3-31-17
CIVIL
STATE OF CALIFORNIA

REVISIONS

NO.	DATE	DESCRIPTION
1	6/8/15	PRELIMINARY
2	6/10/15	90% ZD
2	6/22/15	95% ZD

SUNNYVALE FIRE STATION 5
160' MONOPOLE
1210 BORDEAUX DRIVE
SUNNYVALE, CA 94089

DRAWN: MRB DATE: 6/29/15
FILE: 6638-A11
SHEET NO.
A-11

MADE IN U.S.A.

DATA SHEET

DC Surge Protection for RRH/Integrated Antenna Radio Head

RxxDC-4750-PF-48 • RxxDC-3315-PF-48

Tower / Base / Rooftop / Rooftop Distribution Models

Raycap's flexible Tower, Base Stations and Rooftop protection and Distribution products provide protection for up to 6 Remote Radio Heads/Integrated Antennas. The solutions mitigate the risk of damage due to lightning and provide high levels of availability and reliability to radio equipment.

Mounting Bracket Included

Shown with optional 90° elbow for side entry. Can be installed on left or right side of unit.

Features

- Employs the Strikesorb® 30-V1-HV Surge Protective Device (SPD) specifically designed for the Remote Radio Head (RRH) installation environment and certified for use in DC applications and at low DC operating voltages (48V).
- The Strikesorb 30-V1-HV is a Class I SPD, certified by VDE per the IEC 61643-1 standard as suitable for installation in areas where direct lightning exposure is expected. Strikesorb 30-V1-HV is able to withstand direct lightning currents of up to 5kA (10/350) and induced surge currents of up to 60kA (8/20).
- Provides very low let through / clamping voltage - unique for a Class I product - as it does not employ spark gaps or other switching elements. Strikesorb offers unique protection levels to the RRH equipment as well as the Base Band Units.
- Alarms for SPD sacrifice, Moisture detection and Intrusion.
- Fully recognized to the UL 1449 3rd Edition Safety Standard.
- Patent pending design

Benefits

- Offers unique maintenance-free protection against direct lightning currents.
- Protects up to 6 Remote Radio Heads and connects up to 12 fiber pairs.
- Utilizes an IP 67 rated enclosure, allowing for indoor or outdoor installation on a roof or tower top.
- Configurable cable ports are designed to accommodate varying diameters of hybrid (combined power and fiber optic) or standard cables with diameters up to 2" (will fit most standard 1⅝" coax class cables) depending upon port configuration.
- Lightweight aerodynamic design provides maximum flexibility for tower top installation.
- Companion to the RxxDC-1064-PF-48 (Sector) model.

Tower / Base / Rooftop / Rooftop Distribution Models:
RxxDC-4750-PF-48
RxxDC-3315-PF-48

Companion Sector Model:
RxxDC-1064-PF-48

DC1-48-60-18U

© 2013 Raycap All rights reserved.

G02-00-236 130301

Raycap

www.raycapsurgeprotection.com

SPECIFICATIONS

DC Surge Protection for RRH/Integrated Antenna Radio Head

RxxDC-4750-PF-48 • RxxDC-3315-PF-48

Tower / Base / Rooftop / Rooftop Distribution Models

Electrical

Model Numbers	RxxDC-4750-PF-48	RxxDC-3315-PF-48
Nominal Operating Voltage	48 VDC	48 VDC
Nominal Discharge Current [I_n]	n/a	20 kA 8/20 µs
Maximum Surge Current [I_{max}]	n/a	60 kA 8/20 µs
Maximum Impulse (Lightning) Current per IEC 61643-1	n/a	5 kA 10/350 µs
Maximum Continuous Operating Voltage [U_c]	n/a	75 VDC
Voltage Protection Rating (VPR) per UL 1449 3rd Edition	n/a	400V
Protection Class as per IEC 61643-1	n/a	Class I
SPD Alarm	n/a	upon sacrifice
Intrusion Sensor	microswitch	microswitch
Moisture Sensor	infrared moisture detector	infrared moisture detector
Strikesorb Module Type	**No Strikesorb modules installed** *(used as Distribution Unit only)*	30-V1-HV **Strikesorb modules installed to protect 6 Remote Radio Heads**

Mechanical

Suppression Connection Method	Compression lug, #20 - #6 AWG (0.5 mm² - 16 mm²)	
Fiber Connection Method	LC-LC Single mode	
Pressure Equalizing Vent	Gore™ Vent	
Environmental Rating	IP 67	
Operating Temperature	-40° C to +80° C	
UV Resistant	Yes	
Weight	System: 26 lbs (11.80 kg)	System: 32 lbs (14.51 kg)
Combined Wind Loading	150mph (sustained): 185 lbs (823 N)	

Standards Compliance

Strikesorb modules are compliant to the following Surge Protective Device (SPD) Standards

Standards	ANSI/UL 1449 3rd Edition
	IEEE C62.41
	NEMA LS-1, IEC 61643-1:2005 2nd Edition (Class I Protection)
	IEC 61643-12
	EN 61643-11:2002 (including A11:2007)

Product Diagram

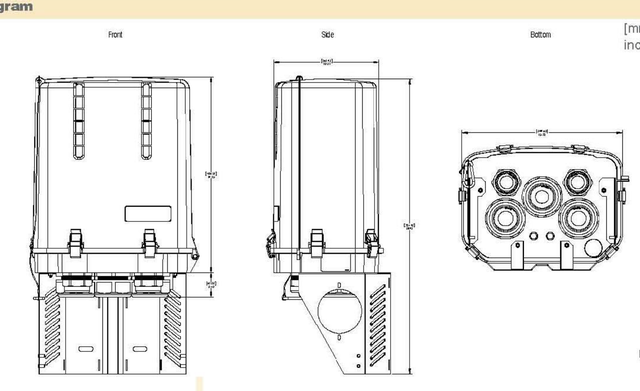

AWG=American Wire Gauge

Raycap

www.raycapsurgeprotection.com

G02-00-236 130301

RAYCAP CUT SHEETS
SCALE: NONE

L. D. STROBEL CO. INC.
DESIGN / CONSTRUCTION
WIRELESS COMMUNICATIONS

1022 SHARY CIRCLE, SUITE 9, CONCORD, CA. 94518
PHONE: 925-686-3241 FAX: 925-686-3350

REGISTERED PROFESSIONAL ENGINEER
CONRAD L. ALFARO
NO C 28699
EXPIRE 3-31-17
CIVIL
STATE OF CALIFORNIA

REVISIONS

NO.	DATE	DESCRIPTION
1	6/8/15	PRELIMINARY
2	6/10/15	90% ZD
2	6/22/15	95% ZD

SUNNYVALE FIRE STATION 5
160' MONOPOLE
1210 BORDEAUX DRIVE
SUNNYVALE, CA 94089

DRAWN: MRB DATE: 6/29/15
FILE: 6638-A12
SHEET NO.
A-12

MADE IN U.S.A.

DATA SHEET

DC Surge Protection for RRH/Integrated Antenna Radio Head

RxxDC-1064-PF-48

Sector Model

Raycap's flexible sector protection and distribution products provide protection for up to 2 Remote Radio Heads/Integrated Antennas. The solutions mitigate the risk of damage due to lightning and provide high levels of availability and reliability to radio equipment.

Mounting Bracket Included

Features

- Employs the Strikesorb® 30-V1-HV Surge Protective Device (SPD) specifically designed for the Remote Radio Head (RRH) installation environment and certified for use in DC applications and at low DC operating voltages (48V).
- The Strikesorb 30-V1-HV is a Class I SPD, certified by VDE per the IEC 61643-1 standard as suitable for installation in areas where direct lightning exposure is expected. Strikesorb 30-V1-HV is able to withstand direct lightning currents of up to 5kA (10/350) and induced surge currents of up to 60kA (8/20).
- Provides very low let through / clamping voltage - unique for a Class I product - as it does not employ spark gaps or other switching elements. Strikesorb offers unique protection levels to the RRH equipment as well as the Base Band Units.
- Alarms for SPD sacrifice, Moisture detection and Intrusion.
- Fully recognized to the UL 1449 3rd Edition Safety Standard.
- Patent pending design

Benefits

- Offers unique maintenance-free protection against direct lightning currents.
- Protects up to 2 Remote Radio Heads and connects up to 8 fiber pairs.
- Utilizes an IP 67 rated enclosure, allowing for indoor or outdoor installation on a roof or tower top.
- Configurable cable ports are designed to accommodate varying diameters of hybrid (combined power and fiber optic) or standard cables with diameters up to 1.7" (will fit most standard 1 1/4" coax class cables) depending upon port configuration.
- Lightweight aerodynamic design provides maximum flexibility for tower top installation.
- Companion to the RxxDC-4750-PF-48 / RxxDC-3315-PF-48 (Tower/Base/Rooftop/Rooftop Distribution) models.

Sector Model:
RxxDC-1064-PF-48

Companion Base Models:
RxxDC-4750-PF-48
RxxDC-3315-PF-48

DC1-48-60-18U

© 2013 Raycap All rights reserved.

G02-00-235 130301

Raycap

www.raycapsurgeprotection.com

SPECIFICATIONS

DC Surge Protection for RRH/Integrated Antenna Radio Head

RxxDC-1064-PF-48

Sector Model

Electrical

Model Numbers	RxxDC-1064-PF-48
Nominal Operating Voltage	48 VDC
Nominal Discharge Current [I_n]	20kA 8/20 µs
Maximum Surge Current [I_{max}]	60kA 8/20 µs
Maximum Impulse (Lightning) Current per IEC 61643-1	5 kA 10/350 µs
Maximum Continuous Operating Voltage [U_c]	75 VDC
Voltage Protection Rating (VPR) per UL 1449 3rd Edition	400V
Protection Class as per IEC 61643-1	Class I
SPD Alarm	upon sacrifice
Intrusion Sensor	microswitch
Moisture Sensor	infrared moisture detector
Strikesorb Module Type	30-V1-HV **Strikesorb modules installed to protect 2 Remote Radio Heads**

Mechanical

Suppression Connection Method	Compression lug, #20 - #6 AWG (0.5 mm² - 16 mm²)
Fiber Connection Method	LC-LC Single mode
Pressure Equalizing Vent	Gore™ Vent
Environmental Rating	IP 67
Operating Temperature	-40° C to +80° C
UV Resistant	Yes
Weight	System: 14 lbs (6.35 kg)
Combined Wind Loading	150mph (sustained): 80 lbs (356 N)

Standards Compliance

Strikesorb modules are compliant to the following Surge Protective Device (SPD) Standards	
Standards	ANSI/UL 1449 3rd Edition
	IEEE C62.41
	NEMA LS-1, IEC 61643-1:2005 2nd Edition (Class I Protection)
	IEC 61643-12
	EN 61643-11:2002 (including A11:2007)

Product Diagram

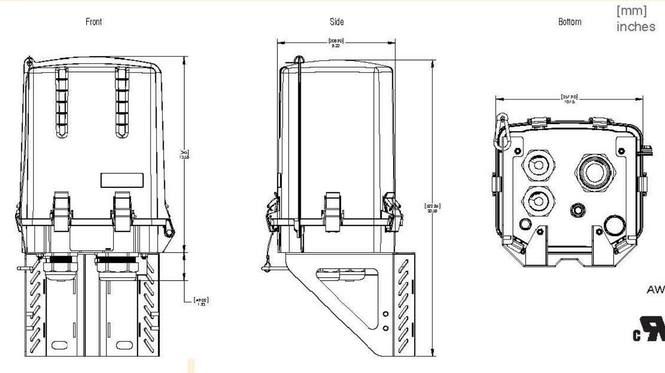

AWG=American Wire Gauge

Raycap

www.raycapsurgeprotection.com

G02-00-235 130301

L. D. STROBEL CO. INC.
DESIGN / CONSTRUCTION
WIRELESS COMMUNICATIONS
1022 SHARY CIRCLE, SUITE 9, CONCORD, CA. 94518
PHONE: 925-686-3241 FAX: 925-686-3350

REGISTERED PROFESSIONAL ENGINEER
CONRAD L. ALPARO
NO C 28699
EXPIRE 3-31-17
CIVIL
STATE OF CALIFORNIA

REVISIONS

NO.	DATE	DESCRIPTION
1	6/8/15	PRELIMINARY
2	6/10/15	90% ZD
2	6/22/15	95% ZD

SUNNYVALE FIRE STATION 5
160' MONOPOLE
1210 BORDEAUX DRIVE
SUNNYVALE, CA 94089

DRAWN: MRB DATE: 6/29/15
FILE: 6638-A13
SHEET NO.

A-13

MADE IN U.S.A.

RAYCAP CUT SHEETS
SCALE: NONE